KERALA WATER AUTHORITY

DETAILED PROJECT REPORT

SEWERAGE TREATMENT/ SEPTAGE MANAGEMENT WITH 5.4 MLD CAPACITY STP FOR PATTAMBI MUNICIPALITY IN PALAKKAD DISTRICT

Prepared by:
Sewerage Circle Thrissur
February 2022

ACKNOWLEDGEMENT

We wish to express our sincere gratitude to all those involved in making the Detailed Project Report for Sewerage treatment/Septage management for Pattambi Municipality. We would like to thank the Chairman, Managing Director and other senior officials of KWA for their encouragement and motivation. The immense support provided by the technical team of sewerage vertical is remarkable. We express our gratitude to the authorities of Pattambi Municipality for their support without which this endeavor would not have been possible. We trust that the project become reality and as per the time line shown and it would be beneficial to reduce pollution load on Bharathapuzha river and improve living standards of people in Pattambi municipality.

SEWERAGE CIRCLE THRISSUR

CHIEF ENGINEER
Sewerage, PPD & WASCON
Kerala Water Authority
Thiruvananthapuram -33

CONTENTS

EXECUTIVE SUMMARY

PROJECT AT A GLANCE

CHAPTER 1

INTRODUCTION

1.1 BACKGROUND

1.2 PROJECT AREA

1.3 ACTION PLAN FOR REJUVENATION OF BHARATHAPUZHA RIVER

1.4 PRESENT SCOPE

CHAPTER 2

ESTIMATION OF DESIGN FLOWS

2.1 DETAILS OF PROJECT AREA

2.1.1 HISTORY

2.1.2 SOIL TYPE AND GEOGRAPHY

2.1.3 CLIMATE

2.1.4 INDUSTRIES AND OTHER ESTABLISHMENTS

2.1.5 ZONING OF THE PROJECT AREA

2.2 ESTIMATION OF SEWER LOAD

2.2.1 GENERAL

2.2.2 SEWER LOAD CALCULATIONS

CHAPTER 3

PLANNING DESIGNING AND LAYING OF SEWER NETWORK

3.1 GENERAL

3.2 COMPONENTS OF SEWER NETWORK

3.3 DESIGN OF SEWER NETWORK

3.3.1. CREATING PRIMARY MODEL FROM GEOGRAPHIC INFORMATION SYSTEMS (GIS)

3.3.2 LOCATION OF STP

3.3.3 TOPOGRAPHICAL SURVEY USING DGPS

3.3.4 SOCIAL SURVEY

3.3.5 HYDRAULIC SIMULATION OF SEWER NETWORK

3.3.6 DETAILS OF PIPES

3.4 DESIGN OF MANHOLES AND LIFTING STATION

3.5 DESIGN OF COLLECTION WELLS

3.6 LAYING OF SEWER NETWORK

3.6.1 EXCAVATION AND LAYING

3.6.2 SEWER CARRIAGE SYSTEM WITH PIPELINES AND CONNECTIONS TO HOUSES/OTHER UNITS

CHAPTER 4

DESIGN OF SEWAGE TREATMENT PLANT

4.1 GENERAL

4.2 WASTE WATER TREATMENT METHODS

4.3 COMPONENTS OF SEWAGE TREATMENT SYSTEM

4.4 PROPOSED STP SITE

4.5 INITIAL COMPONENTS OF TREATMENT

4.5.1 DESIGN OF CO-TREATMENT UNITS FOR SEPTAGE

4.5.2 UNIT OPERATIONS IN CO TREATMENT FACILITY

4.5.3 UNIT OPERATIONS IN STP

4.6 DESIGN OF MBBR UNIT

4.6.1 PROCESS ANALYSIS AND DESIGN

4.7 CHEMICAL UNIT PROCESSES

4.8 DESIGN OF FILTER FEED, CHLORINE CONTACT UNITS AND PRESSURE FILTERS

4.9 PLAN OF SAFE REUSE OF TREATED WATER

4.10 SLUDGE DISPOSAL PLAN

4.11 PRELIMINARY STRUCTURAL DESIGN OF COMPONENTS

4.12 DIMENSIONS OF STP UNITS

CHAPTER 5

DETAILED ESTIMATE

5.1 GENERAL

5.2 ABSTRACT OF ESTIMATE

5.3 DETAILED ESTIMATE OF COMPONENTS

CHAPTER 6

OPERATION AND MAINTENANCE

6.1 GENERAL

6.2 PLANNING FOR EFFECTIVE OPERATION AND MAINTENANCE

6.3 TYPE OF MAINTENANCE

6.4 INSPECTION AND EXAMINATION OF SEWER

6.5 SEWER CLEANING

6.6 PROTECTION OF SEWER SYSTEMS

6.7 INSPECTION OF MANHOLES AND APPURTENANCES

6.8 CLEANING OF MANHOLES

6.9 SAFTEY PRACTICES

6.10 OPERATION AND MAINTENANCE OF LIFTING STATIONS

6.11 OPERATION AND MAINTENANCE OF PUMPING STATIONS

6.11.1 OPERATION OF PUMPS

6.12 SMART MANAGEMENT AND ONLINE MONITORING USING INTERNET OF THINGS (IoT)

6.13 ODOUR CONTROL METHODS

6.13.1 PREVENTION OF ODOUR

6.13.2 CONTROL OF ODOUR BY CHEMICAL ADDITION

6.14 MAINTAINING AN ECO-FRIENDLY SYSTEM

6.15 OCCUPATIONAL HEALTH HAZARDS AND SAFTEY MEASURES

6.16 COST ANALYSIS

CHAPTER 7

CONCLUSION

7.1 OBSERVATIONS FROM ANALYS

7.2 INSTITUTIONAL ARRANGEMENTS

7.2.1 DISRTICT LEVEL APPROACH

7.2.2 URBAN LOCAL BODY (ULB) LEVEL APPROACH

7.3 DATA INFORMATION AND MANAGEMENT

7.4 ENVIRONMENTAL IMPACT MANAGEMENT

7.5 GENDER EQUALITY AND SOCIAL IMPLICATIONS

7.6 ACTION PLAN FOR IMPLEMENTATION

7.7 RECOMMENDATIONS

EXECUTIVE SUMMARY

Sewage contains numerous pathogens that dwell in human intestinal tract. In addition to this sewage contains nutrients which can simulate growth of aquatic plants and subsequent deterioration of water quality. Hence proper treatment of sewage before discharging in it to water bodies is essential to protect public health and environment. The water quality status under National Water Quality Monitoring Programme reveals the polluted stretches in the district namely Bharathapuzha along Pattambi. Hence proper treatment of waste water is found very much essential to protect the river. At present there is no sewage treatment plant in the area. The present proposal is for providing sewage treatment facility for the entire municipality.

The sewage and sullage load generated for the project area was determined from the water consumption analysis and the capacity of the sewage treatment is arrived as 3.40 MLD. The design of sewer network and treatment plant components are done in accordance with the accepted practice of design including IS codes and CPHEEO guidelines. The effluent characteristics were adopted in accordance with the regulations especially the NGT guidelines on it. The biological unit processes adopted is Moving Bed Bio Film Reactors with a facility for nitrification and de nitrification also. For additional purification secondary clarifiers are proposed with modern plate settler. The total estimated cost of the project is Rs. 362,12,61,800/(Rupees Two hundred and Sixty One Crores Twelve Lakhs and Three Thousand Only) with 10 years operation and maintenance cost including power charges. The plant is to be equipped with sludge handling and disposal units also. It is planned to provide ecofriendly units for the system with the provisions especially for the elevator portions of the units. For conserving energy and for optimum performance of the system, solar energy source is also planned to be used. Also, for trouble free performance of the system, at all points of influence sensors for measuring the value of flow and required parameters are to be installed. Using internet of Things (IoT) enabled software system the control of the entire process can done effectively.

Executive Engineer
PPD Regional Office
Kerala Water Authority
Kochi - 682011

Assistant Executive Engineer
PPD Regional Office
Kerala Water Authority
Kochi - 682011

Assistant Engineer
PPD and Sewerage Circle
Kerala Water Authority
Kozhikode - 20

CHIEF ENGINEER
Sewerage, PPD & WASCON
Kerala Water Authority
Thiruvananthapuram -33

PROJECT AT A GLANCE

Sl No	Item	Description
1	Name of the project	5.40 MLD Sewage treatment plant and sewer network for Pattambi Municipality
2	District	Palakkad
3	Project Area	Pattambi Municipality
4	Coverage	15.84 km²
5	Treatment Units	Pretreatment for both sewage and septage , biological treatment using SBBR, Clarifier, filter, Sludge handling units , chlorination etc.
6	Population benefitted	49328 (Projected population in 2052)
7	Capacity of STP	5.40 MLD
8	Total Network length	72.4 km
9	No of collection wells	3
10	No of lifting stations	04
11	No of manholes	2681
12	Implementing agency	Pattambi Municipality
13	Period of Execution	24 month(s)

CHIEF ENGINEER
Sewerage, PPD & WASCON
Kerala Water Authority
Thiruvananthapuram -33

ABSTRACT OF COST

Sl. No.	ITEM	AMOUNT
A	**CIVIL WORKS**	
1	Site Preparation-LS	₹ 1,16,150
2	OG Trap, Receiving Chamber, Screen, Grit Chamber	₹ 43,22,342
3	Equalisation Tank & Primary Clarifier	₹ 1,35,02,769
4	Dilution Tank for Co-treatment	₹ 8,17,759
5	Moving Bed Biofilm Reactors	₹ 1,79,71,526
6	Clarifier with Tube/Plate Settler	₹ 28,38,776
7	Sludge Sump and Thickener	₹ 15,85,882
8	Chlorine Contact Tank and Filter Feed Tank Tank	₹ 11,78,228
9	Treated Water Tank	₹ 19,07,562
10	Green Belt and Landscaping	₹ 11,95,000
11	Facility for Recycling Purposes	₹ 5,00,000
12	Building with Trussed Roof and Eco-friendly walls	₹ 98,78,002
13	Equipment, Laboratory items, Furniture and Computer	₹ 15,00,000
14	Pile foundations for RCC structures	₹ 1,38,82,584
15	Sewer network with pipelines and chambers	₹ 1,20,46,69,576
	TOTAL	₹ 1,37,70,26,146
B	MECHANICAL ITEMS	₹ 6,53,33,151
C	ELECTRICAL ITEMS	₹ 1,19,56,344
D	TOTAL PROJECT COST	₹ 1,45,23,85,841
	GST @ 18%	₹ 26,17,85,815
	DPR preparation charge @ 2.5%	₹ 3,63,59,141.03
	Centage charges@10%	₹ 14,54,36,564
	Unforeseen	₹ 2,839
E	GRAND TOTAL	₹ 2,89,79,50,000
F	Total O&M cost for 10 years	₹ 72,32,53,000
G	TOTAL COST including 10 years O&M	₹ 2,62,12,03,000
	(Rupees Two hundred and Sixty Two Crores Twelve Lakhs Three Thousand Only)	

Assistant Engineer
PPD and Sewerage Circle
Kerala Water Authority

Assistant Executive Engineer
PPD Regional Office
Kerala Water Authority
Kochi-682011

Executive Engineer
PPD Regional Office
Kerala Water Authority
Kochi-682011

Superintending Engineer
PPD Regional Office
Kerala Water Authority
Kochi-682011

CHIEF ENGINEER
Sewerage, PPD & WASCON
Kerala Water Authority
Thiruvananthapuram -33

LIST OF FIGURES

Fig.1.1	*POPULATION DENSITY IN PALAKKAD DISTRICT*
Fig.1.2	*BHARATHAPUZHA RIVER*
Fig.1.3	*PATTAMBI BRIDGE*
Fig 1.4	*POLLUTION LOAD ON BHARATHAPUZHA AS PER THE STUDIES BY POLLUTION CONTROL BOARD*
Fig 2.1	*PROJECT AREA IN GOOGLE MAP*
Fig.2.2	*DETAILS OF VARIOUS WARDS IN PATTAMBI MUNICIPALITY*
Fig 2.3	*ZONING PATTERN IN PATTAMBI MUNICIPALITY*
Fig 3.1	*SEWER NETWORK IN PATTAMBI MUNICIPALITY*
Fig 3.2	*STP SITE VISIT WITH LOCAL BODY AUTHORITIES*
Fig 3.3	*LOCATION OF STP IN GOOGLE MAP*
Fig 3.4	*BASE STATION SETTING FOR DGPS SURVEY AT PATTAMBI MUNICIPALITY*
Fig.3.5	*EPASWWM MODEL OF ZONE 1*
Fig.3.6	*EPASWWM MODEL OF ZONE 2*
Fig.3.7	*EPASWWM MODEL OF ZONE 3*
Fig.3.8	*MAP SHOWING VARIATION OF INVERT LEVELS IN ZONE 1*
Fig.3.9	*MAP SHOWING VARIATION OF INVERT LEVELS IN ZONE 2*
Fig.3.10	*MAP SHOWING VARIATION OF INVERT LEVELS IN ZONE 3*

Fig 3.11	*TYPICAL PROFILE PLOT IN ZONE 1*
Fig.3.12	*WATER ELEVATION PROFILE PLOTTED IN SWWM MODEL OF SEWERNETWORK WITH LIFTING IN BETWEEN*
Fig 4.1	*SEPTAGE MANAGEMENT*
Fig 4.2	*MBBR CARRIER MEDIA IN MBBR TANK*
Fig 7.1	*CAPITAL COST PLANNING*
Fig 7.2	*OPERATING COST PLANNING*
Fig 7.3	*SUGGESTIONS AND RECOMMENDATIONS*

LIST OF TABLES

TABLE 1.1	*DRAINS DISCHARGING POLLUTED WATER INTO THE RIVER BHARATHAPUZHA AND THEIR POLLUTION LOAD JULY 2019*
TABLE 1.2	*DRAINS DISCHARGING POLLUTED WATER INTO THE RIVER BHARATHAPUZHA AND THEIR POLLUTION LOAD JULY 2019*
TABLE 1.3	*DRAINS DISCHARGING INTO THE RIVER BHARATHAPUZHA AT PATTAMBI AND THEIR POLLUTION LOAD ON APRIL 2021*
TABLE 2.1	*INSITUTIONAL NEEDS FOR POTABLE WATER AS PER CPHEEO*
TABLE 2. 2	*SEWER LOADS FROM HOUSES*
TABLE 2.3	*SEWER LOAD FROM INSTITUTIONS*
TABLE 2.4	*SEPTAGE LOAD FROM HOUSES*
TABLE 2.5	*CHARACTERISTICS OF DIFFERENT PARAMETERS*
TABLE 3.1	*COMPONENTS OF SEWER NETWORK*
TABLE 3.2	*PIPES ALONG MAIN ROADS*
TABLE 3.3	*PIPES ALONG BRANCH ROADS*
TABLE 3.4	*LARGE DIAMETER PIPES*
TABLE 3.5	*PIPES WITH PRESSURIZED FLOW*
TABLE 3.6	*DETAILS OF QUANTITY OF EXCAVATION IN LAYING SEWER LINES*
TABLE 3.7	*RECOMMENDED DIMENSIONS OF MANHOLE AS PER IS 4111*
TABLE 3.8	*DETAILS OF MANHOLES*
TABLE 3.9	*DETAILS OF PUMPS IN LIFTING STATIONS*

TABLE 3.10	*DETAILS OF COLLECTION WELLS*
TABLE 3.11	*DESIGN OF COLLECTION WELLS*
TABLE 4.1	*IMPORTANT WASTE WATER CONTAMINANTS*
TABLE 4.2	*CLASSIFICATION OF SURFACE WATERS IN INDIA*
TABLE 4.3	*CHARACTERISTICS OF RAW SEWAGE*
TABLE 4.4	*GENERALLY USED TREATMENT METHODS*
TABLE 4 .5	*COMPONENTS OF A SEWAGE TREATMENT PLANT*
TABLE 4.6	*DESIGN OF CO TREATMENT UNITS*
TABLE 4.7	*DESIGN OF INITIAL COMPONENTS OF STP*
TABLE 4.8	*UNIT PROCESSES IN MBBR*
TABLE 4.9	*CHEMICAL UNIT PROCESSES*
TABLE 4.10	*FINAL TREATMENT PROCESSES*
TABLE 4.11	*SLUDGE TREATMENT UNITS*
TABLE 4.12	*LOAD CARRYING CAPACITY OF PILES CALCULATED BASED ON IS 2911*
TABLE 4.13	*DIMENSIONS OF STP COMPONENTS*
TABLE 5.1	*ABSTRACT OF ESTIMATE*
TABLE 6.1	*CONTROL OF ODOUR BY CHEMICAL ADDITION*
TABLE 6.2	*OPERATION AND MAINTENANCE COSTS*
TABLE 7.1	*ACTION PLAN FOR IMPLEMENTATION*

LIST OF ANNEXURES	
A.1	*DETAILS OF PIPE NETWORK IN ZONE 1*
A.2	*DETAILS OF PIPE NETWORK IN ZONE 2*
A.3	*DETAILS OF PIPE NETWORK IN ZONE 3*
B	*LAYOUT PLAN OF STP*
C	*SCHEMATIC DIAGRAM OF STP*
D	*PROCESS FLOW DIAGRAM OF STP*
E	*TYPICAL STRUCTURAL DRAWINGS OF COMPONENTS*
F	*STRUCTURAL DRAWINGS OF EQUALISATION TANK*
G	*STRUCTURAL DRAWINGS OF PRIMARY CLARIFIER*
H	*DETAILED ESTIMATE*
I	*RESOLUTION FROM MUNICIPALITY*
J	*SEWAGE FLOW SIMULATION MODEL IN COMPACT DISC*

CHAPTER 1

INTRODUCTION

1.1 BACK GROUND

Pollution of water bodies due to human activities is of major concern during these decades. As per WHO report, 80% of the diseases in human beings are water borne or water related. It is mainly due to water pollution and water logging. When untreated sewage accumulates and is allowed to become septic, the decomposition of organic matter leads to nuisance conditions including the production of malodorous gases. Sewage contains numerous pathogens that dwell in human intestinal tract. In addition to this sewage contains nutrients which can simulate growth of aquatic plants and subsequent deterioration of water quality. Hence proper treatment of sewage before discharging to it to water bodies is essential to protect public health and environment.

The government of Kerala has taken initiatives to abate pollution in rivers. Besides the Hon. National Green Tribunal (NGT) has given strict directions to implement sewerage system in the whole state in time bound manner As a part of this effort, as an initial step two ULBs were selected from each district for immediate implementation of sewerage system and in the case of Palakkad district Pattambi and Palakkad municipalities are selected for this purpose as these are the two major contributors of pollution in Bharathapuzha river

Kerala Water Authority (KWA) ,which was established in 1st April 1984 under Kerala Water and Waste Water ordinance , 1984 by converting the then Public Health Engineering Department (PHED) to provide for development and regulation of water supply and waste water collection and disposal in the state of Kerala and for matters connected there with. Hence KWA is entrusted as knowledge partner, service provider and a central agency for coordinating the activities related to the planning and implementation of sewerage system for Local Self Government Institutions

1.2 PROJECT AREA

Palakkad is one of the fourteen revenue districts of Kerala and is a border district of Kerala situated 351 KM north of Thiruvananthapuram, the state capital and 135 Km north of Kochi, the port city. Presently Palakkad is the largest District in Kerala. Palakkad is supposed to have derived its name from the “Pala tree” (Alsteria Scholaris) and “kadu” (forest). The whole area is said to have been once covered by pala trees. This

district, situated almost in the centre of the State, has no coastal line. Palakkad district is bounded on the North by Malappuram district, in the East by Coimbatore district of Tamilnadu, in the South by Thrissur and in the West by Thrissur and Malappuram districts. It lies between 10^0 21' and 11^0 14' North latitude and 76^0 02' and $76^0$54' East longitude. The total geographical area of the district is 4480 sq.km representing 11.53 per cent of the State's geographical area. Palakkad is a major Paddy growing area of the state. Palakkad, the largest producer of rice is known as the granary of Kerala and its economy is primarily agricultural.

Bharathapuzha is the most important river in the district as well as the longest in the State with its tributaries flow through the district and ultimately falls in the Lakshadweep sea at Ponnani. This river originates from Anamalai hills at about 610 m above the mean sea level. It is also known as the Ponnani River or 'Nila Nadi'. The river sprawls through Pollachi Taluk of Tamil Nadu before entering in Palakkad District. The main river passes through Palakkad and Ottappalam Taluks and finally it falls into the sea at Ponnani in Malappuram District. The main tributaries are Kalpathy or (Korayar), Kannadi or Chittur puzha or Amravathi, Gayathri (Kollangode or Cheerakuzhi) and Thootha puzha (Pilanthol river). Bharathapuzha river which has a length of 209 km is the second largest river in Kerala. Bharathapuzha flows through Pattambi town which is one of the biggest town in Palakkad district which connects roads from three districts-Palakkad,,Malappuram and Thrissur.

Pattambi is located at western end of Palakkad District with geographical coordinates of 10°49'0" North and 76°12'0" East. Total area of Pattambi Municipality is 15.84 km^2 and density of population is 1800/km^2. As per 2011 census population of India, the total population of Pattambi Panchayath was 28632. Now it has been converted to municipality. The records of Pattambi municipality shows that there are almost 1500 trades including shops, lodges, hotels, bakeries etc. All these trades are carried out in the town area the drain from which naturally flows to the river Bharathapuzha.

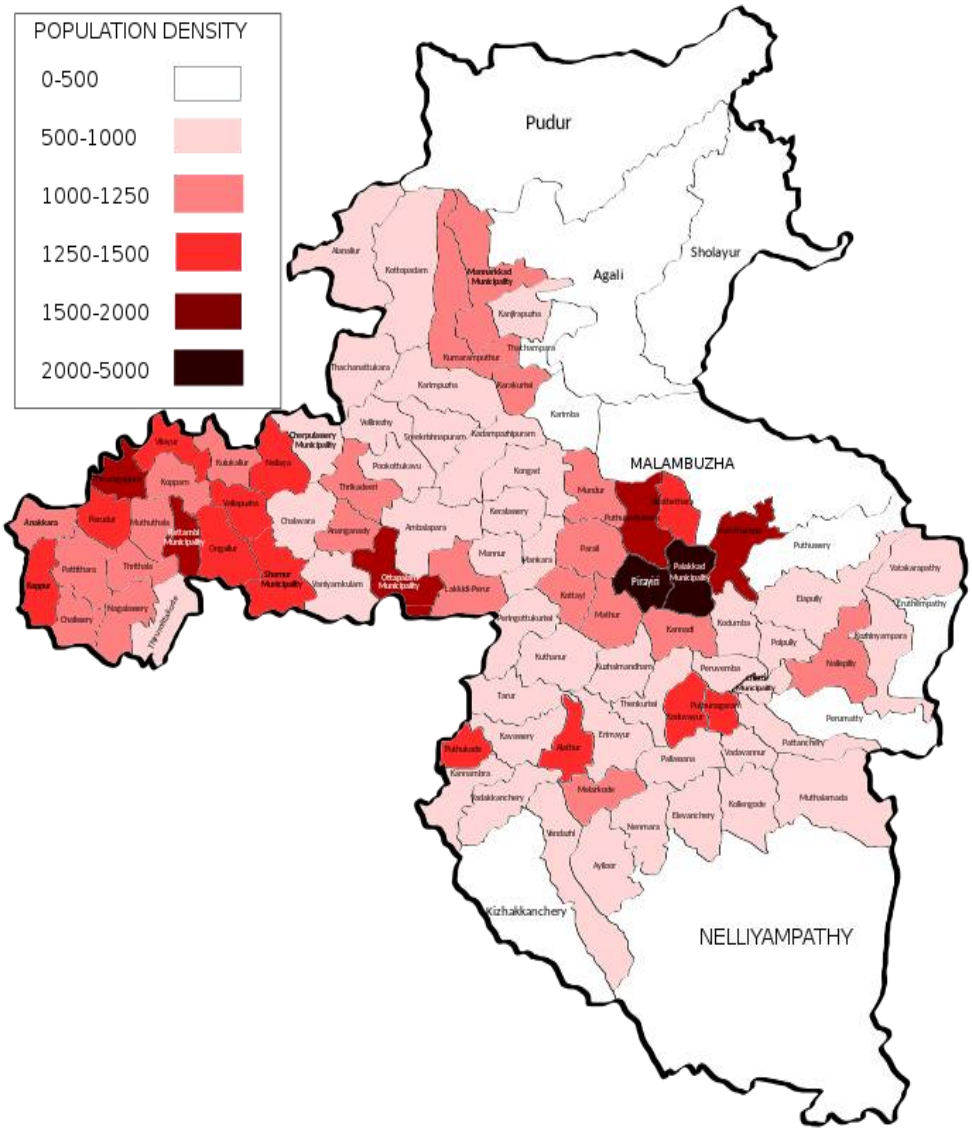

Fig.1.1 POPULATION DENSITY IN PALAKKAD DISTRICT

Fig.1.2 BHARATHAPUZHA RIVER

Fig.1.3 PATTAMBI BRIDGE

1.3 ACTION PLAN FOR REJUVENATION OF BHARATHAPUZHA RIVER

The water quality data under National Water Quality Monitoring Programme reveals the polluted stretches in the district namely Bharathapuzha along Pattambi and Bhavani along Elaichivazhi.

Based on the order of the Hon'ble National Green Tribunal (NGT) and other documents, Government of Kerala vide GO(Ms) No.12/2019/WRD dated 30.4.2019 constituted a District Level Committee for preparing an action plan for rejuvenation of polluted stretches in each district. As per the findings of this committee the major source of pollution of Bharathapuzha at Pattambi are as follows:

- Six drains from Pattambi town opening to the river which carries domestic waste water from the trade establishments located in the town area from Mele Pattambi to Nila Hospital
- Solid waste dumping into the sides of the river and the solid waste reaching the river carried by the drains
- Possibility of open defecation in the river
- Possibility of discharging of septage (liquid waste from periodic cleaning of septic tank) in to the river by persons engaged in cleaning septic tank

Other findings of field visit were as follows:

- There are no storm water drain discharging any water into the river from other bank of Pattambi which belongs to Thrithala Panchayath, in the stretch
- Storm water drains from upstream of pattambi ,from Ongallur Panchayath are dry
- There is a virtual no flow effect in the stretches due to the barrage effect of Velliyankallu regulator which is about 6 km downstream. This regulator remains closed during summer season
- The stretch is the source of water supply in two intake wells for supplying water in the Pattambi municipality making the stretch important in view of pollution.

Sl. No:	Location	Latitude Longitude	Flow rate liters per day)	BOD (mg/l)	COD (mg/l)	Pollution load in terms of BOD (kg/day)	TC (CFU/ 100 ml)
1	Near NILA Hospital	10^0 48‘4.2‖ N 76^0 10‘30.6‖ E	1170.73	31.2	72	0.0365	*3000*
2	Near NILA Hospital	10^0 48‘4.2‖ N 76^0 10‘30.6‖ E	7200	16	40	0.115	*2800*
3	Near Pattambi railway Bridge (Nambram)	10^0 48‘00.5‖ N 76^0 11‘01.5‖ E	72000	96	160	6.912	2500
4	Left side of Pattambi Bridge	10^0 48‘02.1‖ N 76^0 10‘48.8‖ E	800	1480	2280	1.18	5600
5	Right side of Pattambi Bridge	10^0 48‘02.1‖ N 76^0 10‘48.8‖ E	No flow at the time of study hence cannot determined				
6	Near Railway bridge (Nabram)	10^0 48‘ 04.3‖N $76^0$11‘ 02.2‖ E	42352.9	64	120	2.71	3200

TABLE 1.1: DRAINS DISCHARGING POLLUTED WATER INTO THE RIVER BHRATHAPUZHA AND THEIR POLLUTION LOAD JULY 2019

Sl. No	Location	Latitude Longitude	Flow rate liters per day)	BOD (mg/l)	COD (mg/l)	Pollution load in terms of BOD (kg/day)	TC (CFU/ 100 ml)
1	Near NILA Hospital	10^0 48'4.2" N 76^0 10'30.6" E	1347	60.8	64	0.0819	5000
2	Near NILA Hospital	10^0 48'4.2" N 76^0 10'30.6" E	155.52	23.6	48	0.0037	5000
3	Near Pattambi railway Bridge (Nambram)	10^0 48'00.5" N 76^0 11'01.5" E	4320	8.4	32	0.036	800
4	Left side of Pattambi Bridge	10^0 48'02.1" N 76^0 10'48.8" E	119.23	148	376	0.0176	3000
5	Right side of Pattambi Bridge	10^0 48'02.1" N 76^0 10'48.8" E	No flow at the time of study hence cannot determined				
6	Near Railway bridge (Nabram)	10^0 48' 04.3"N $76^0$11' 02.2" E	143.99	12	32	0.0017	10000

TABLE 1.2: DRAINS DISCHARGING POLLUTED WATER INTO THE RIVER BHARATHAPUZHA AND THEIR POLLUTION LOAD MARCH 2020

Sl. No	Location	Latitude Longitude	Flow rate liters per day)	BOD (mg/l)	COD (mg/l)	Pollution load in terms of BOD (kg/day)	TC (CFU/ 100 ml)
1	Upstream drain near NILA Hospital	10^0 48'4.2" N 76^0 10' 30.6" E	No water flow				
2	Downstream drain near NILA Hospital	10^0 48' 4.2" N 76^0 10' 30.6" E	16920	24	34	0.406	100000
3	Downstream drain near Pattambi Railway Bridge at Nambram	10^0 48' 00.5" N 76^0 11' 01.5" E	17280	5	38	0.0864	48000
4	Left side of Pattambi Bridge	10^0 48' 02.1" N 76^0 10' 48.8" E	No water flow				
5	Right side of Pattambi Bridge	10^0 48' 02.1" N 76^0 10' 48.8" E	No water flow				
6	Upstream drain near Pattambi Railway Bridge at Nambram	10^0 48' 04.3"N $76^0$11' 02.2" E	No water flow				
7	Near Comfort Station, Bus and Auto stand, Pattambi	10^0 48' 05.4"N $76^0$10' 44.33" E	7200	122	192	0.878	140000

TABLE 1.3 DRAINS DISCHARGING INTO THE RIVER BHARATHAPUZHA AT PATTAMBI AND THEIR POLLUTION LOAD ON APRIL 2021

Based on the studies conducted by the District River Rejuvenation Committee proper treatment of sewage before discharging it to the water bodies is very much essential to protect public health and environment. As per the report of the committee Pattambi

municipality is entrusted with the implementation of septage and sewerage treatment plant so as to reduce the pollution load and improve the water quality.

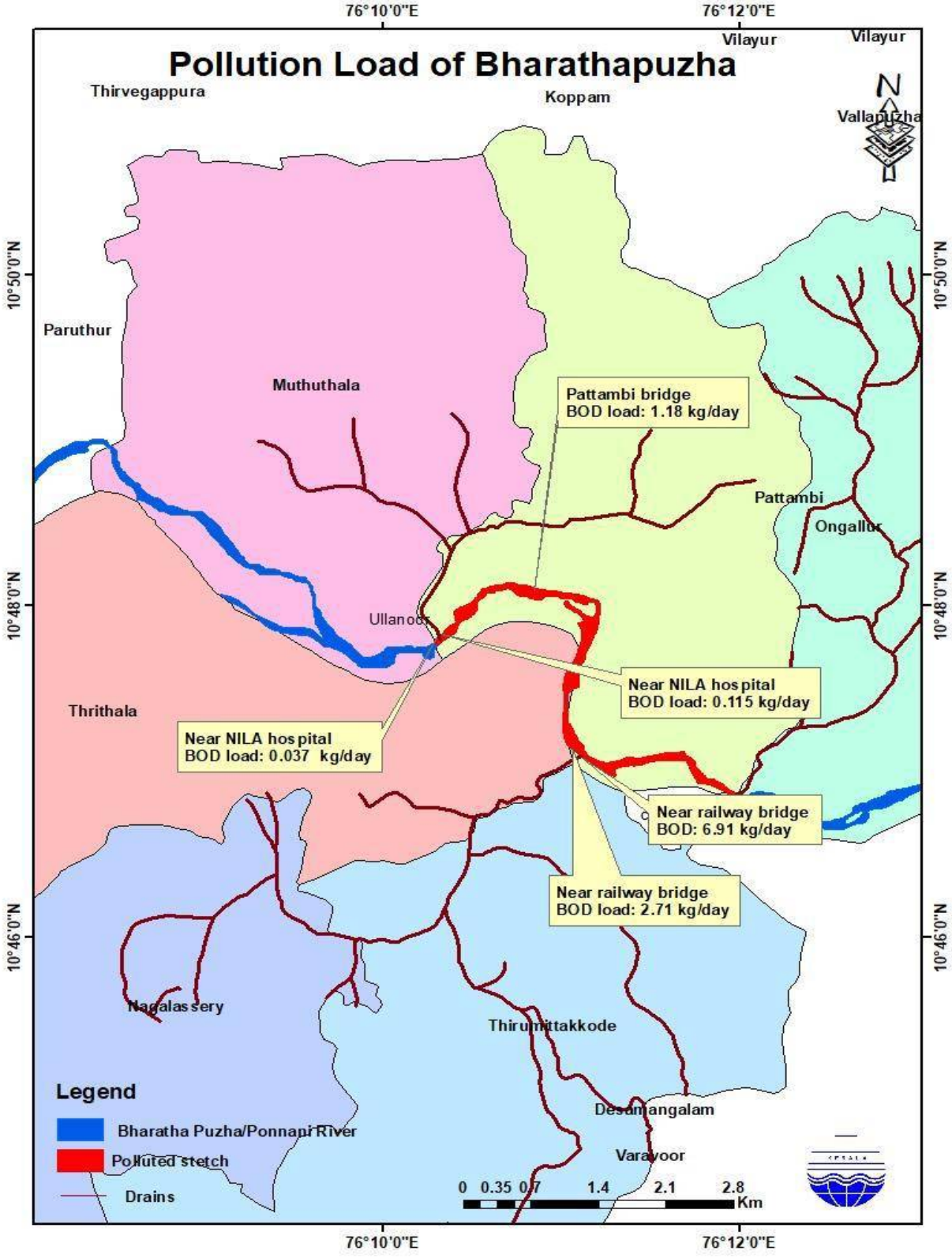

Fig 1.4 POLLUTION LOAD ON BHARATHAPUZHA AS PER THE STUDIES BY POLLUTION CONTROL BOARD

1.4 PRESENT SCOPE

The Detailed Project Report for the sewerage treatment plant and sewer network for Pattambi municipality has been prepared by KWA and is presented in the following chapters

Chapter 1 deals with background of the project and the present pollution load in Bharathapuzha in Pattambi stretches

Chapter 2 deals with general aspects of sewer load calculations and detailed sewer load calculations for the proposed STP for full coverage of the municipality

Chapter 3 deals with the general aspects of sewer network design and the design of sewer network for the project area

Chapter 4 deals with basics of unit operations and processes and the method adopted in the present project with detailed design calculations

Chapter 5 deals with the estimate for the project

Chapter 6 deals with various aspects of operation and maintenance of sewage treatment plant in detail

Chapter 7 Conclusion

CHAPTER 2

ESTIMATION OF DESIGN FLOWS

2.1 DETAILS OF PROJECT AREA

2.1.1 HISTORY

Pattambi is well known for its cultural importance by situating in the bank of the river Bharathapuzha, historical name as 'Nila' .Nethirimangalam was the old name of Pattambi. A cultural combination of Malappuram, Thrissur and Palakkad obviously differentiating the area from other places of Palakkad.

2.1.2 SOIL TYPE AND GEOGRAPHY

Palakkad district is divided mainly into three geographical regions namely high lands, midlands and lowlands. Pattambi belongs to the midland division.

A recent soil investigation study in the project area reveals that top soil is clayey silty sand followed by sandy silty clay and below this rocky strata at shallow depth

2.1.3 CLIMATE

The district has a tropical humid climate with hot wind. The district receives maximum rainfall during the southwest monsoon followed by the north east monsoon. During the other months receives comparatively less rainfall. The Pattambi block receives on average of 2348 mm of rainfall annually. The wind is predominantly from west and east during morning as well as in the evening hours. The wind speed is high during August (13.6 kmph). The humidity is higher during monsoon period, ie.from June to September. It is around 90% during this period. All through the year the humidity is high during the morning.

2.1.4 INDUSTRIES AND OTHER ESTABLISHMENTS

The records of Pattambi municipality shows that there are almost 1500 trades including shops, lodges, hotels, bakeries etc. with valid trade licenses. All these trades are carried out in the town area the drains from which naturally flows to Bharathapuzha

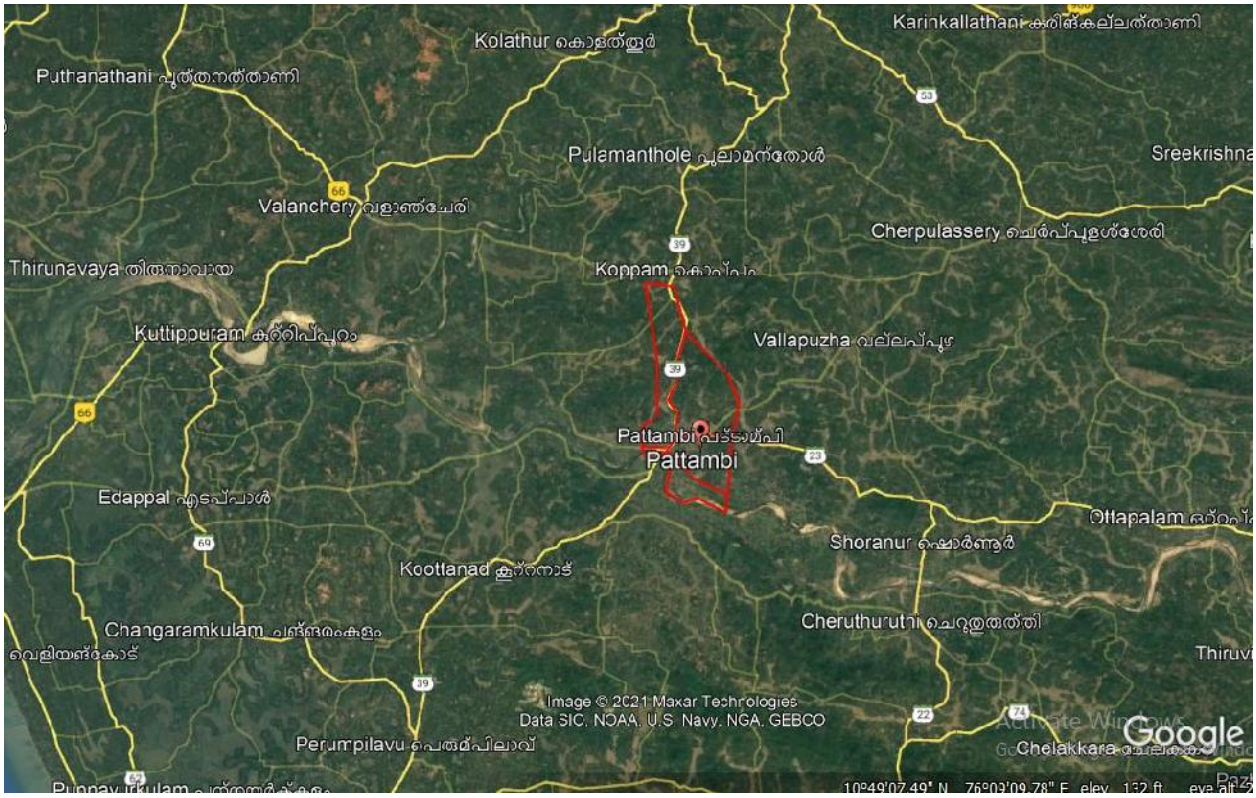

Fig 2.1 PROJECT AREA IN GOOGLE MAP

2.1.5 ZONING OF THE PROJECT AREA

Using the available GIS data the primary model of sewer network was generated .It helped to gather information regarding population density, presence of water bodies, road network and topographic features and for planning an optimum site for STP as well as routing of sewer load**.**

Later after conducting social survey and detailed DGPS survey, it was found out that nearly half portions of original zones 3 & 4 (wards 1 to 6, 27,28 and parts of wards 26&7) are found with lesser population density and unfavorable topographical levels for laying gravity sewer. Hence the matter was discussed in detail with the municipal authorities and in order to get optimum design and to avoid unnecessary expenditure the above portions are considered as septage area with co-treatment and the zoning pattern revised accordingly as shown in fig 2.3

.

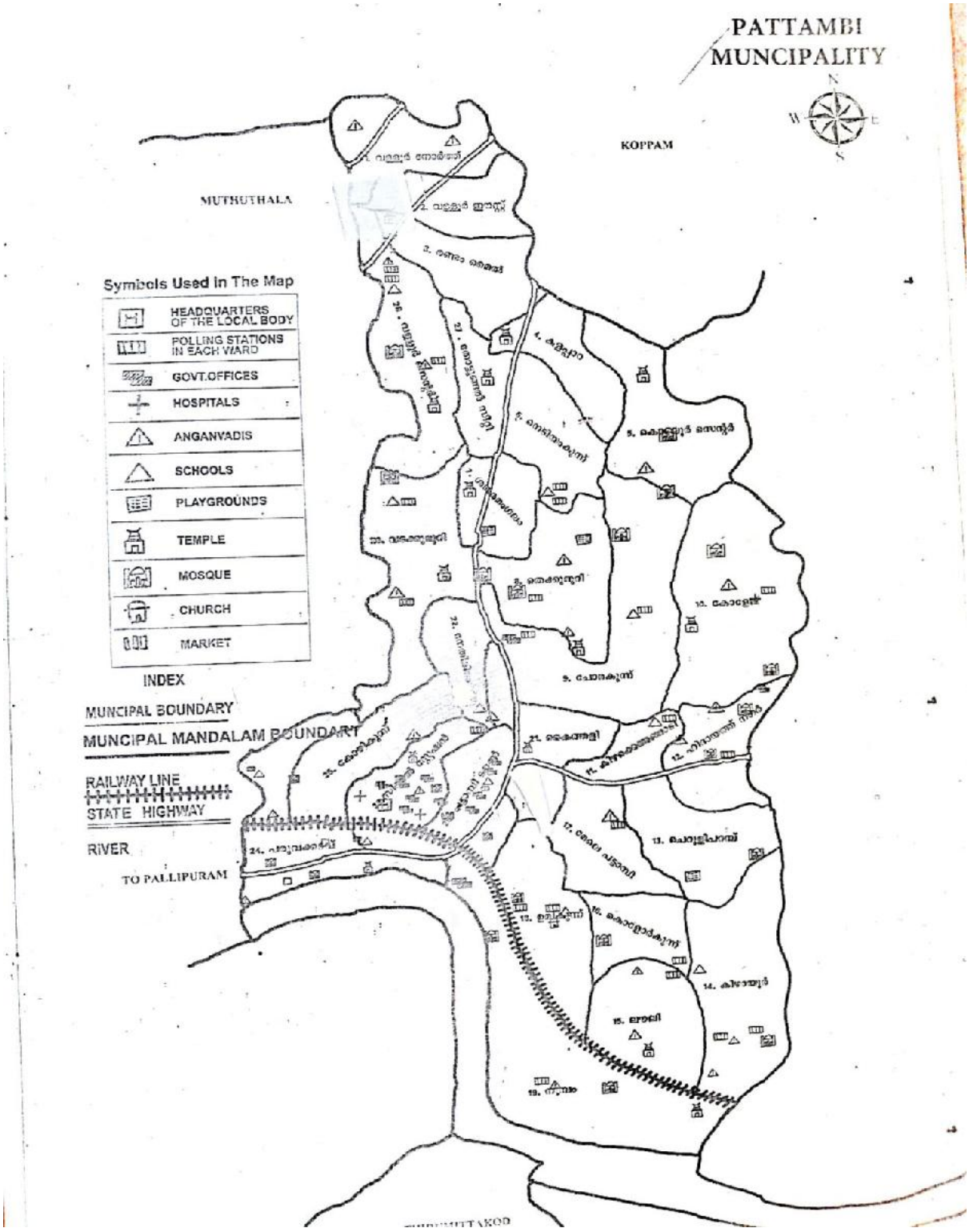

Fig.2.2 DETAILS OF VARIOUS WARDS IN PATTAMBI MUNICIPALITY

Fig 2.3 ZONING PATTERN IN PATTAMBI MUNICIPALITY

2.2 ESTIMATION OF SEWER LOAD

2.2.1 GENERAL

The components that make up the waste water flow from a community includes the following:

- Domestic(sanitary) waste water
- Industrial waste water
- Infiltration and inflow
- Storm water

Three types of collection systems are used namely sanitary collection system, storm collection system and combined collection system which are self-explanatory. The source of proposed sanitary sewer system in the project area includes waste water from households which includes waste water from kitchens, toilets, bathrooms etc and also includes waste water from institutions like schools , offices,

shops, hotels etc. The waste water from industries are not recommended to enter sanitary sewer system without treatment as they hinder the biological degradation process of domestic sewage. It is assumed that per capita water supply in Pattambi municipality is 150 liters and 80% of the water supplied is discharged as sewage

Sl No	Institutions	Water Supply (litres)
1	Hospital including laundry and beds exceeding 100	450 per bed
2	Hospital including laundry and beds not exceeding 100	340 per bed
3	Lodging Houses/Hotels	180 per bed
4	Hostels	135 lpcd
5	Nurses Homes& Medical Quarters	135 lpcd
6	Boarding schools/ Colleges	135 lpcd
7	Restaurants	70 per seat
8	Air Ports and sea ports,duty staff	70 per seat
9	Air ports and sea ports alighting and boarding persons	15 lpcd
10	Train and Bus stations duty staff	70 lpcd
11	Train and bus stations alighting and boarding persons	15 lpcd
12	Day schools/Colleges	45 lpcd
13	Offices	45 lpcd
14	Factories, duty staff	45 lpcd
15	Cinemas, Concert Halls and theatres	15 lpcd

TABLE 2.1 INSITUTIONAL NEEDS FOR POTABLE WATER AS PER CPHEEO

2.2.2 SEWER LOAD CALCULATIONS

A) LOAD FROM PROPOSED SEWERAGE AREA

(i) load from households			
Sl No	Ward No	Name of ward	Population in 2011
1	8	Thekkumuri	1038
2	9	Chorakkunnu	1470
3	10	College	991
4	11	Kizhakke Angadi	998
5	12	Hidayath Nagar	926
6	13	Cheruliparambu	1019
7	14	Kizhayur	1320
8	15	Lovely	975
9	16	Kolorkunnu	993
10	17	Mele Pattambi	1003
11	18	Umikunnu	1034
12	19	Nambram	1112
13	20	Pattambi town	930
14	21	Kaithali	1089
15	22	Nethirimangalam	1127
16	23	Civil station	1060
17	24	Paruvakadavu	1071
18	25	Kozhikunnu	1060
19	26	Vadakkumuri	375
20	7	Shangaramangalam	693
		TOTAL	**20284**

TABLE 2.2 SEWER LOADS FROM HOUSES

Assuming design period as 30 years and adopting average population growth per decade as 12.9% projected population in 2052 as per geometric progression method

= Base population x(1+rg)^n

= **33358**

Sewerage load assuming 80% of water supply @150 lpcd

= **4 MLD**

(ii) Load from institutions						
Sl No	Type of institution	No of institutions	Total Number	Unit	Quantity assumed in liters per capita or per bed	Total in liters
1	Hospitals	4	530	bed	340	180200
2	Schools	11	6600	persons	45	297000
3	Hotel	4	600	seats	70	42000
4	Bus stand	1	1500	persons	15	22500
5	Railway station	1	1200	persons	15	18000
6	College	4	3200	persons	45	144000
7	Theatre	1	1200	seats	15	18000
8	Fish Market	1	10	stalls	45	450
TOTAL						**722150**

TABLE 2.3 SEWER LOAD FROM INSTITUTIONS

Total sewage from institutions and households = **4.72 MLD**

Assuming 10 % infiltration, total sewage flow = **5.19 MLD**

B) LOAD FROM PROPOSED SEPTAGE AREA

Load from households			
Sl No	Ward No	Name of ward	Population in 2011
1	1	Valloor North	1144
2	2	Valloor East	1014
3	3	Randam mile	1130

4	4	Kalappara	1025
5	5	Kodaloor Centre	1070
6	6	Nediyamkunnu	1058
7	7	Shangaramangalam	350
8	26	Vadakkumuri	750
9	27	Thottungal City	1090
10	28	Valloor Centre	1080
TOTAL			**9711**

TABLE 2.4 SEPTAGE LOAD FROM HOUSES

Assuming population growth rate in Palakkad district as 12.9 % per decade, population in 2052 as per geometric progression method = **15970**

Assuming quantity of septage sludge as 95 liters/capita/year septage quantity

= **4.16 KL/day**

CO-TREATMENT OF SEPTAGE			
Assumed characteristics of different parameters			
Parameter (mg/litre)	**Raw septage**	**Dilution water (Treated sewage after filtration)**	**Diluted septage (Influent to STP)**
BOD	5000	10	265
TSS	7000	20	400

TABLE 2.5 CHARACTERISTICS IF DIFFERENT PARAMETERS

Assuming quantity of diluted septage as 4.17 m^3/hr ie. 0.1 MLD and working hours as 23.5

capacity of STP required = (5.19+0.1)*(24/23.5) = **5.40 MLD**

CHAPTER 3

PLANNING, DESIGNING AND LAYING OF SEWER NETWORK

3.1 GENERAL

At present there is no sewerage treatment plant in Pattambi municipality and hence no sewer network. The present proposal is for providing sewage treatment for the entire project area. Initially using the available GIS data primary model of sewer network was generated dividing the project area into four zones. Later after conducting social survey and detailed DGPS survey, it was found out that nearly half portions of original zones 3 & 4 are found with lesser population density and unfavorable topographical levels for laying gravity sewer and hence to get optimum design and to avoid unnecessary expenditure the above portions are considered as septage area with co-treatment and the zoning pattern revised with three zones.

The most common type of sewer construction practice involves the use of open trenches and prefabricated pipes. In the present project also, open trenches are planned in most of the areas for laying of sewer load carrying pipe network. However for laying sewer line crossing below railway lines HDD method to be adopted. Sewer loads generated from individual households, commercial establishments, public institutions etc. in the core area of the Pattambi municipality is carried through pipes and concrete chambers to the nearest manholes. From there it is transported through a network of pipes towards the Sewage Treatment Plant (STP). Care has been taken to limit the depth of cutting below 4 meters in most of the cases to avoid construction and operation difficulties. For septage management, de-sludging from sources are performed annually using special equipment and septage is carried to the STP for co-treatment after desirable dilution.

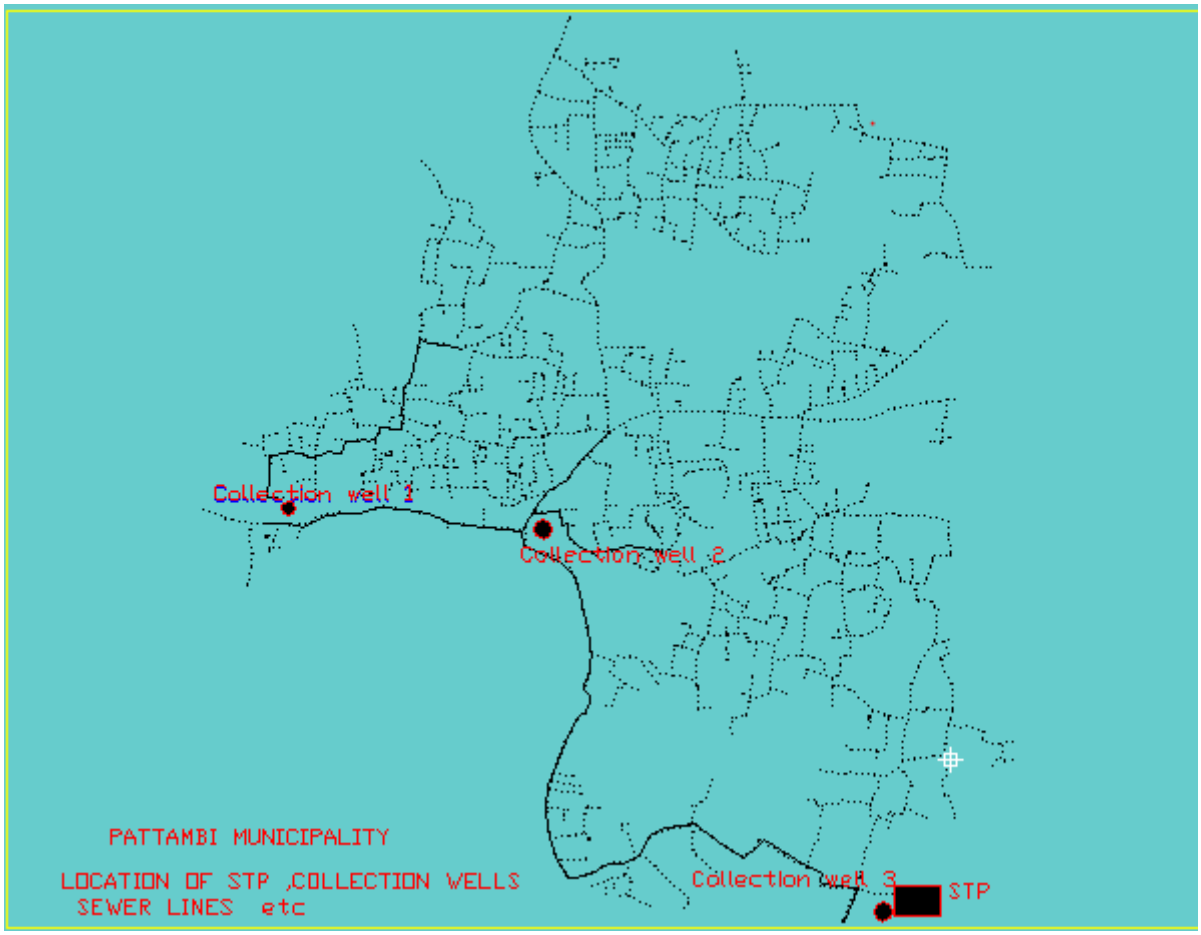

Fig 3.1. SEWER NETWORK IN PATTAMBI MUNICIPALITY

In the Sewerage zone it is proposed to lay sewers for about 73 Kilo meters with pipe size ranging from 180 mm to 600mm inside diameter. Manholes are proposed at every 30 m interval and in every bends and road junctions. Three collection wells are proposed one in each zone as shown in fig 3.1

.

3.2 COMPONENTS OF SEWER NETWORK

The components of the sewage collection and carriage network consists of the following elements:

Sl. No.	Type of element	Material	Function
1	Collection Chambers	Reinforced concrete	Collection of sewage from individual units for transferring to manholes

2	Sewer pipelines	Polyethylene (PE)	Transfer of sewage by gravity flow from one point to other
3	Manholes	Reinforced concrete	Sewage collection points and inspection areas for removing blocks and cleaning of lines
4	Lift manholes	Reinforced concrete	Sewage collection points and inspection areas for removing blocks and cleaning of lines and lifting of sewer load to the next manhole. Submersible pump sets are installed inside in such manholes.
5	Collection well	Reinforced concrete	Centralised collection point for sewer load from a sub-zone in the project area.
6	Pumping station	Reinforced concrete	Centralised collection point for sewer load from a sub-zone in the project area and pumping of sewage to the next well or STP.

TABLE 3.1 COMPONENTS OF SEWER NETWORK

3.3 DESIGN OF SEWER NETWORK

For the design of sewage network, hydraulic analysis was performed for the initially planned network and refined for a set of constraints and inflow values. The pipelines are designed for gravity flow conditions except for lifting and collection points. Minimum outer diameter of the pipeline was taken as 225 mm for main lines along the roads and for carriage from chambers to manholes, it is taken as 180 mm with material as PE confirming to IS 4984. The slope was taken as a minimum value of 1 in 170 in general and care has been taken to provide sufficient slopes to generate self-cleansing velocities during peak flow conditions when the pipe is near to full in load. All stipulations given by the relevant Indian Standard Codes of practice and CPHEEO Manual has been adopted in design.

3.3.1. CREATING PRIMARY MODEL FROM GEOGRAPHIC INFORMATION SYSTEMS (GIS)

Using GIS data available, the project area was examined thoroughly, and a primary model of sewer flow was generated. This model was later refined using reduced elevations obtained from Differential Global Positioning System (DGPS) Real Time Kinematic Survey (RTK) values at the control points established in the primary model. The GIS provides information of population density scatter, presence of water bodies, road network and topographical features as a quick reference for planning an optimum site for the STP as well as the routing of sewer load.

3.3.2 LOCATION OF STP

Suitable land for locating STP components is found available at Nambram in Zone 1 near the river side. As per the detailed design calculations of STP , approximately one acre of land is required for locating STP components and septage units. The land owned by municipality is available and resolution from municipality regarding this is already obtained (Appendix)

Fig 3.2 STP SITE VISIT WITH LOCAL BODY AUTHORITIES

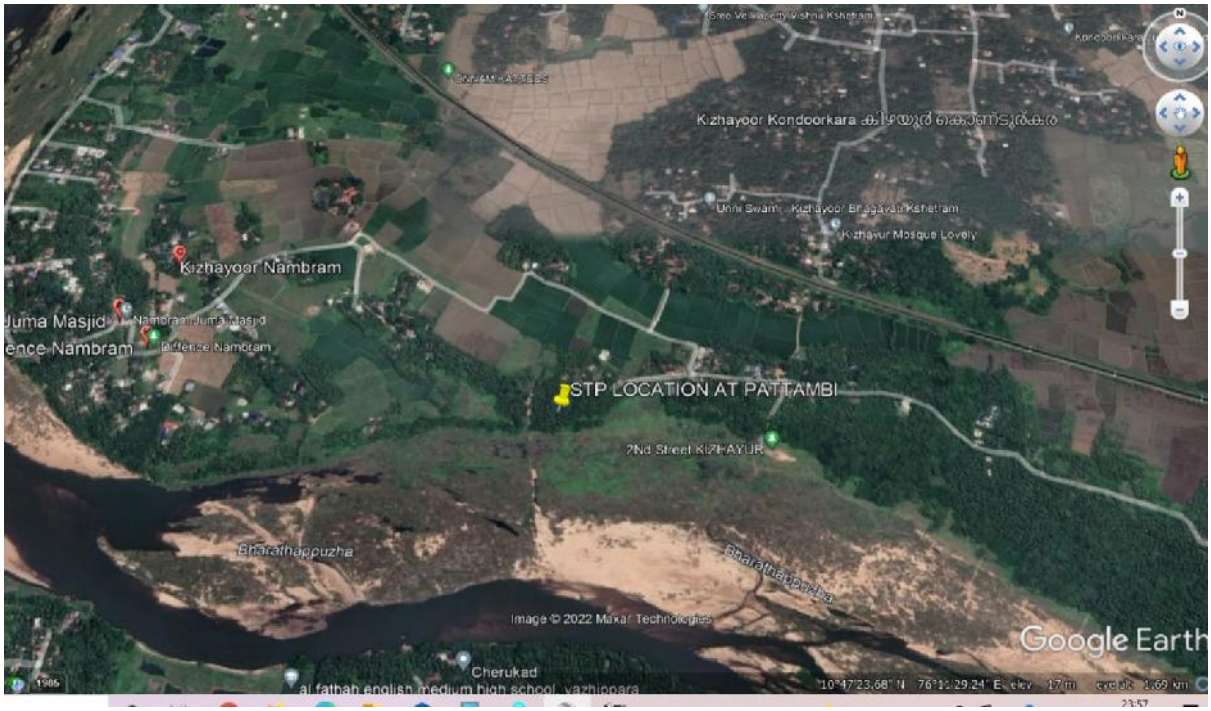

Fig 3.3 LOCATION OF STP IN GOOGLE MAP

LATITUDE	10.79
LONGITUDE	76.19

3.3.3 TOPOGRAPHICAL SURVEY USING DGPS

For ascertaining accurate reduced levels of all control points in the primary model, Real Time Kinematic Survey (RTK) using DGPS was performed. DGPS is an improved autonomous Global Positioning which reduces the effect of correlated errors from two or more receivers only if they are all observing the same satellites. The DGPS data was retrieved in a computer system and subsequently used for hydraulic simulation of the network. However during execution time slight variations may occur in the design and levels due to additional road inclusion and hence the levels should be ascertained before execution as per actual site conditions and modifications to be done if found necessary.

Fig 3.4 BASE STATION SETTING FOR DGPS SURVEY AT PATTAMBI MUNICIPALITY

3.3.4 SOCIAL SURVEY

Social aspects of the sewage load generation have been examined in detail by performing social survey for the project area. Various teams comprising of people intended to gather information regarding presence of houses, commercial establishments and other public institutions were set up and extensive field survey was conducted. The variations of sewage flow and expected abnormalities were also studied and incorporated in the sewer network design

3.3.5 HYDRAULIC SIMULATION OF SEWAGE NETWORK

Hydraulic simulation of sewage network was performed after collection of all basic input data like sewage inflow at all points, expected routing plan for easy carriage of sewer load towards a common collection point and location of STP. Considering the chances of increased floating

population and presence of many industries in Pattambi municipality suitable peak factor to accommodate sewage flow variations are provided in the hydraulic analysis. The sewer flow is expected to be carried out in gravity conditions through a network of pipelines, manholes and lifting stations. The maximum depth of cutting is limited below 4.0 m and hence sewage lifting stations are provided making use of the manholes itself. For all pipelines minimum slopes to generate gravity flow is given as per the recommendations of CPHEEO Manual of Sewage Treatment Systems.

For hydraulic simulation of the sewage network comprising of pipelines, manholes and lifting stations, US Environmental Protection Agencies' Storm Water Management Model (SWMM) is adopted considering its versatility in hydraulic modelling using dynamic flow routing conditions. US EPA's Storm Water Management Model (SWMM) is used throughout the world for planning, analysis, and design related to storm water runoff, combined and sanitary sewers, and other drainage systems.

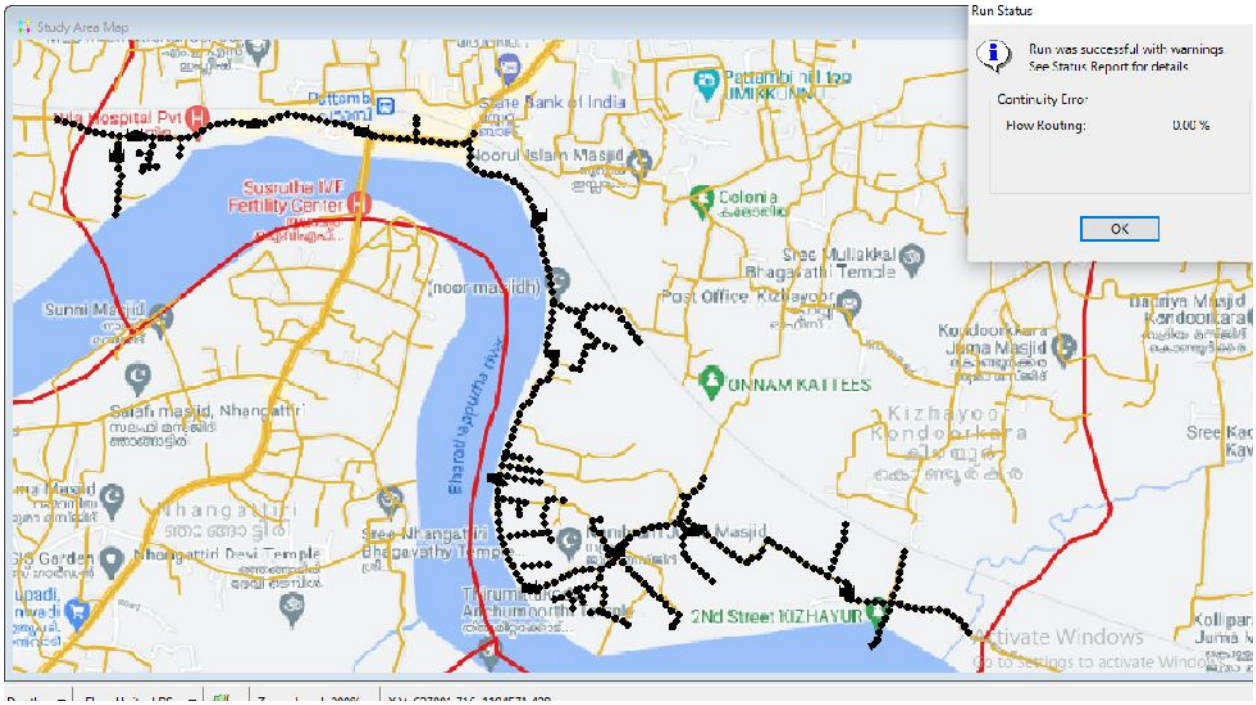

Fig.3.5 EPASWWM MODEL OF ZONE 1

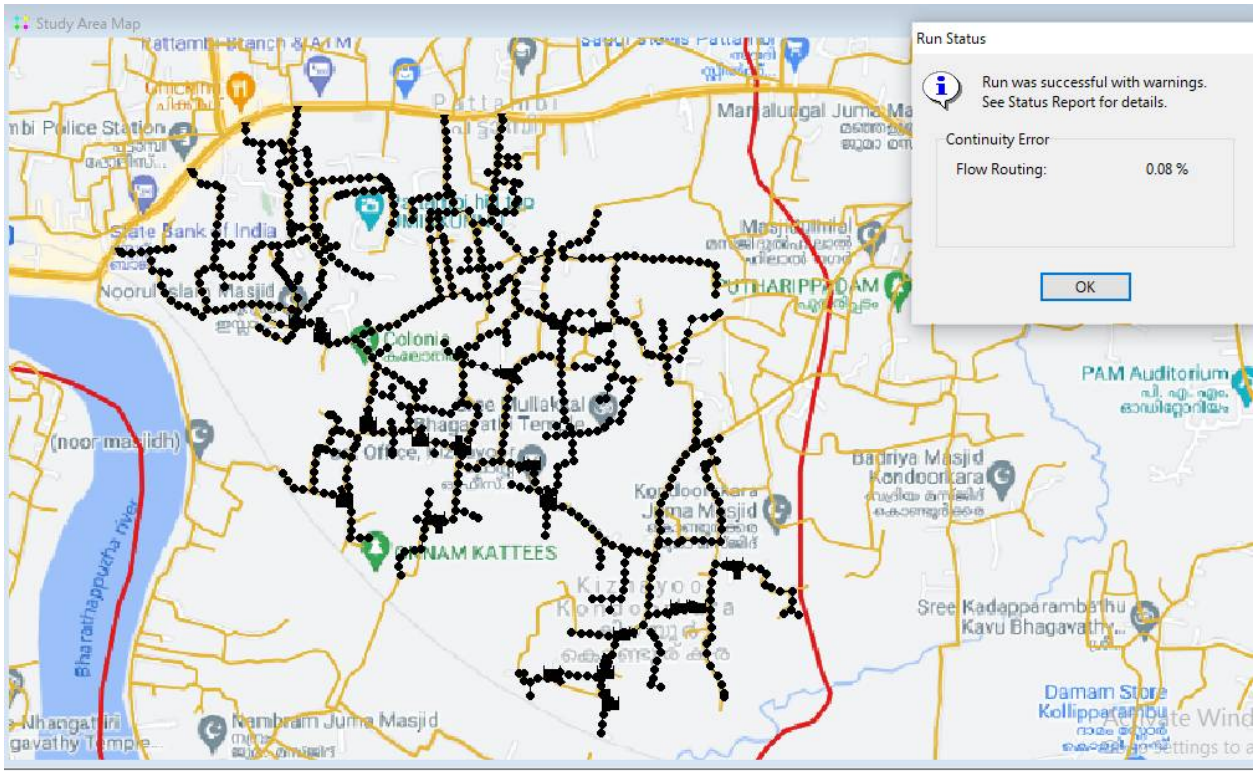

Fig.3.6 EPASWWM MODEL OF ZONE 2

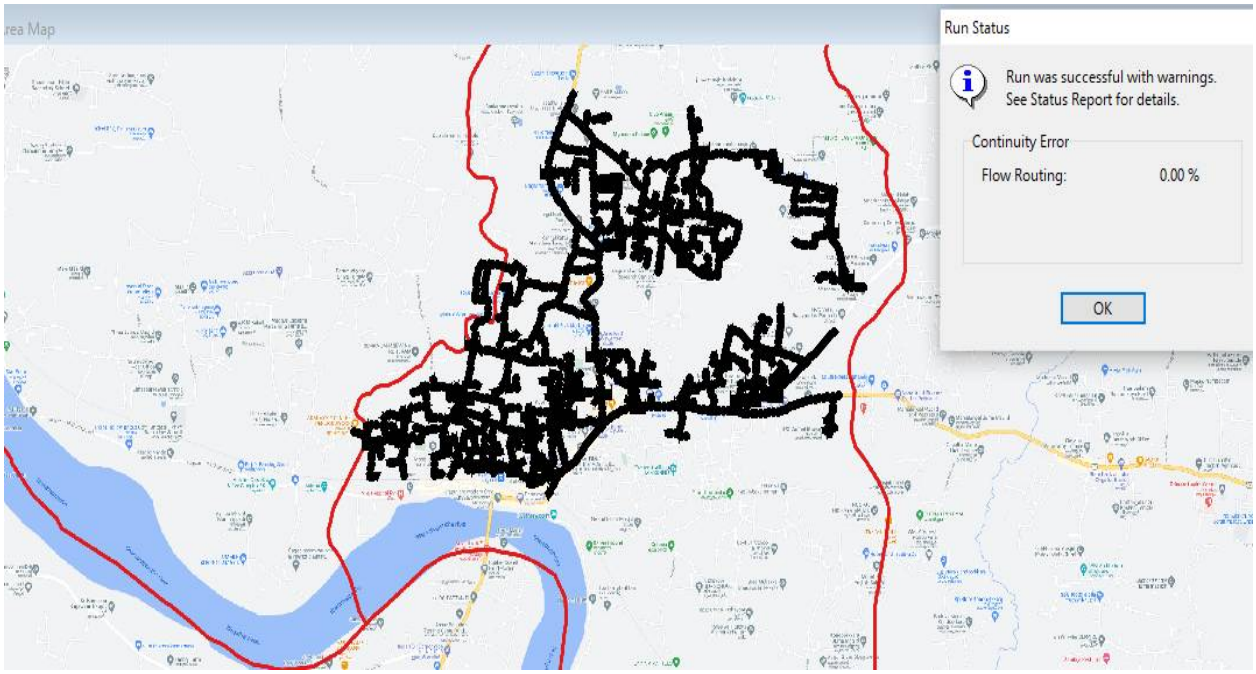

Fig.3.7 EPASWWM MODEL OF ZONE 3

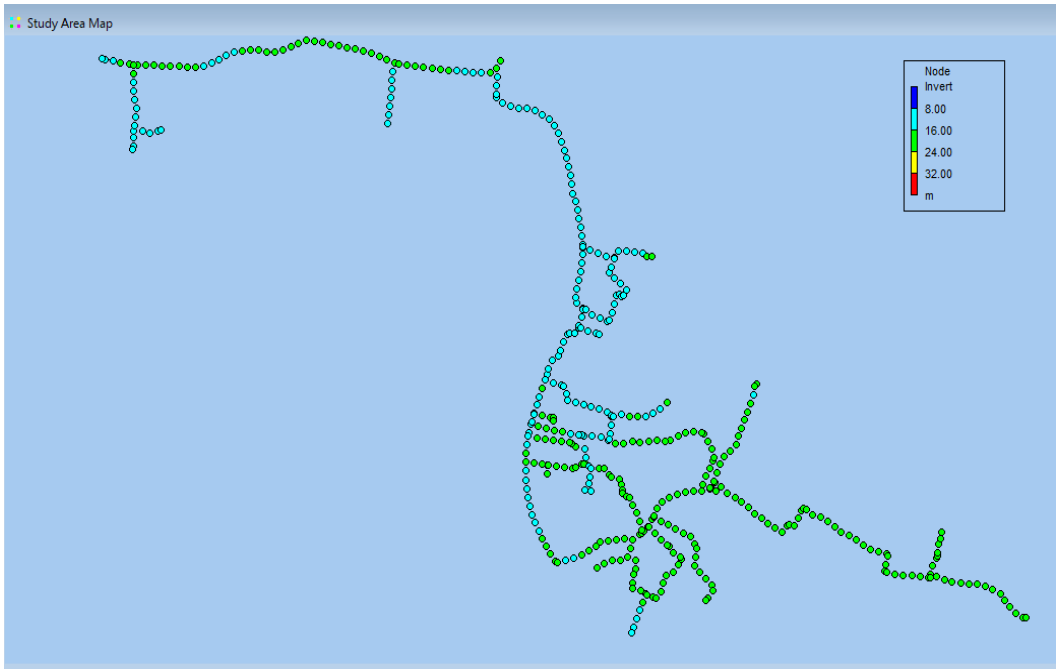

Fig.3.8 MAP SHOWING VARIATION OF INVERT LEVELS IN ZONE 1

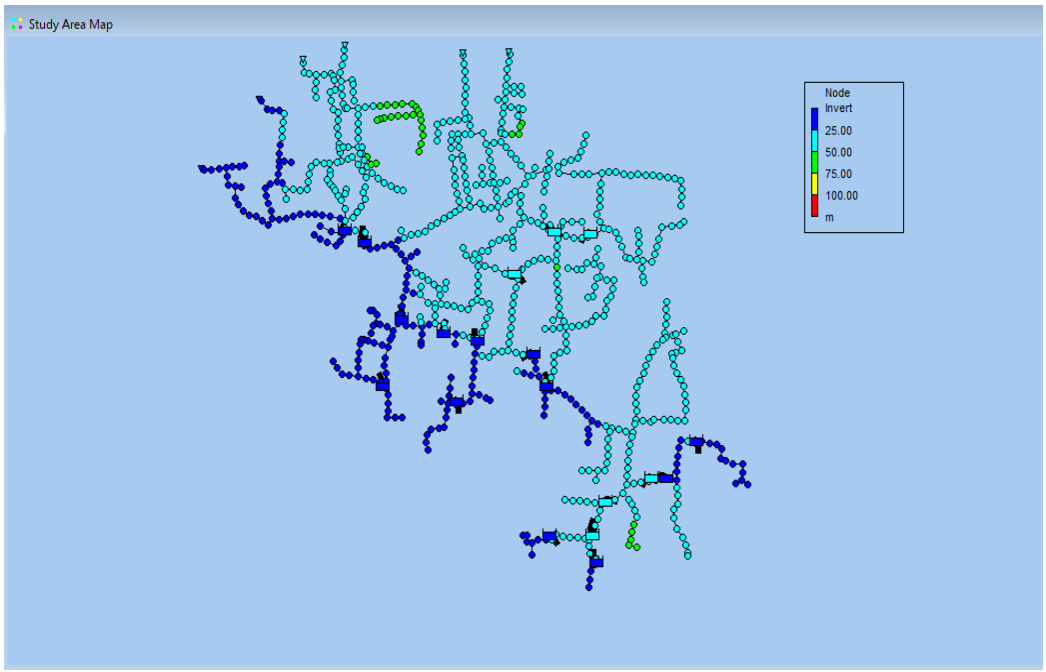

Fig.3.9 MAP SHOWING VARIATION OF INVERT LEVELS IN ZONE 2

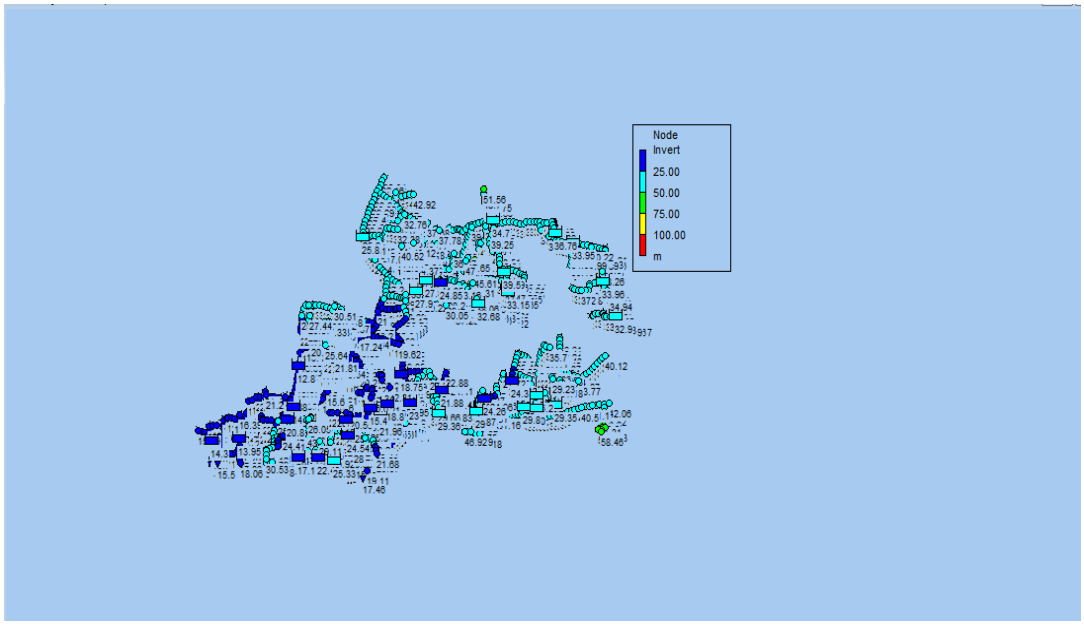

Fig.3.10 MAP SHOWING VARIATION OF INVERT LEVELS IN ZONE 3

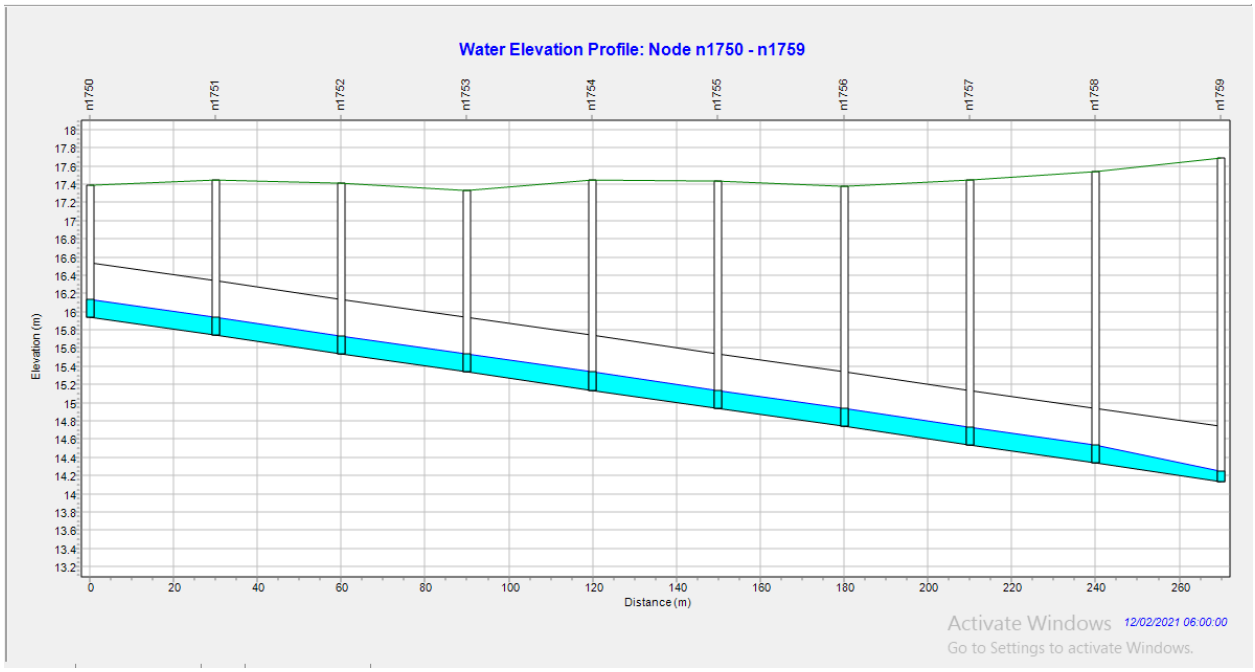

Fig 3.11 TYPICAL PROFILE PLOT IN ZONE 1

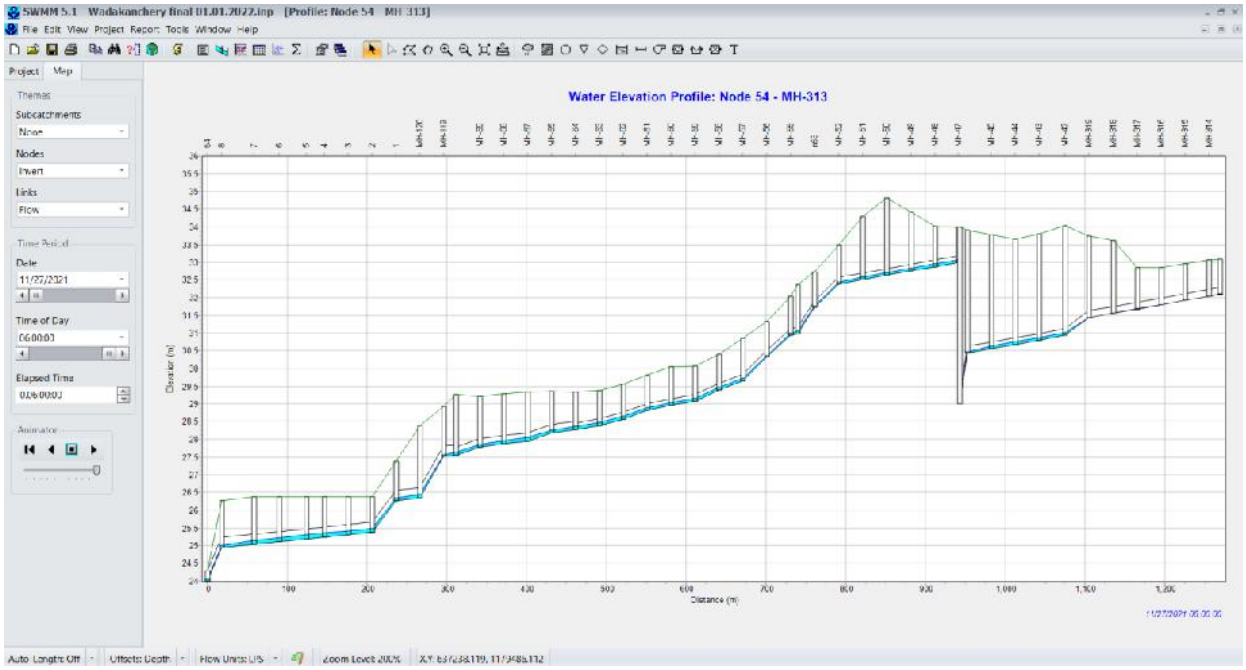

Fig.3.12 WATER ELEVATION PROFILE PLOTTED IN SWWM MODEL OF SEWERNETWORK WITH LIFTING IN BETWEEN

3.3.6 DETAILS OF PIPES

It is propose to provide 225mm to 450mm OD HDPE pipes of pressure rating PN 8 for the pipes along branch road and of pressure rating PN 10 along main roads. For larger diameter pipes corrugated HDPE pipes as per IS 16098 is suggested. For pressurized lines below railway crossing 300 and 350 mm diameter DI pipes are proposed. The details are listed below

TYPE 1	PIPES LAID ALONG MAIN ROADS				
MATERIAL : PE PIPES WITH PRESSURE RATING OF PN 10 AS PER IS 14333					
OD OF PIPE IN mm	THICKNESS in mm	LENGTH in m			TOTAL LENGTH in m
		ZONE 1	ZONE 2	ZONE 3	
225	21.65	293	-	2604	2897
280	26.75	-	-	868	868
355	34.05	443	-	-	443
400	39.25	-	-	513	513
450	44.2	855	-	69	924

TABLE 3.2 PIPES ALONG MAIN ROADS

TYPE 2	PIPES LAID ALONG BRANCH ROADS				
MATERIAL : PE PIPES WITH PRESSURE RATING OF PN 8 AS PER IS 14333					
OD OF PIPE IN mm	THICKNESS in mm	LENGTH in m			TOTAL LENGTH in m
		ZONE 1	ZONE 2	ZONE 3	
225	17.65	4696	20582	32728	58006
280	21.95	80	880	1550	2510
355	27.75	-	747	1518	2265

TABLE 3.3 PIPES ALONG BRANCH ROADS

TYPE 3	PIPE WITH LARGE DIAMETER	
MATERIAL : CORRUGATED PLASTIC PIPES AS PER IS 16098		
NOMINAL DIA in mm	ZONE	LENGTH in m
600	1	3708

TABLE 3.4 LARGE DIAMETER PIPES

TYPE 4	PIPES WITH PRESSURIZED FLOW	
MATERIAL : DI PIPES AS PER IS 8329		
NOMINAL DIA in mm	ZONE	LENGTH in m
300	1&III	180
350	I&II	150

TABLE 3.5 PIPES WITH PRESSURIZED FLOW

DETAILS OF QUANTITY OF EXCAVATION IN SEWER LAYING									
Zone No	Quantity of excavation in m3 for depth						Total quantity of excavation in m3		
	<1.5 m	1.5<D<3		D>3					
	Category 1	Category 2		Category 3					
	0-1.5 m	0-1.5 m	1.5-3 m	0-1.5 m	1.5-3 m	>3 m	0-1.5 m	1.5-3 m	>3 m
1	2244	7770	3530	6944	6944	5546	16958	10474	5546
2	12040	13738	6021	10894	10894	9997	36672	16915	9997
3	28873	20783	9677	11083	11083	8796	60739	20760	8796
TOTAL							**114369**	**48149**	**24339**

TABLE 3.6 DETAILS OF QUANTITY OF EXCAVATION IN LAYING SEWER LINES

3.4 DESIGN OF MANHOLES AND LIFTING STATIONS

A manhole is an opening by which a man may enter a sewer for inspection, cleaning and other maintenance and fitted with a removable cover to withstand traffic loads in sewers. Having designed the sewer system, the manholes are first constructed in identified reaches before the sewers are laid. The diameters of circular manholes for stated depths of sewers are in Table as shown below:

Sl. No.	Range of depths, in m	Internal diameter in m
1	Above 0.90 m and up to 1.65 m	0.90
2	Above 1.65 m and up to 2.30 m	1.20
3	Above 2.30 m and up to 4.5 m	1.50

TABLE 3.7 RECOMMENDED DIMENSIONS OF MANHOLE AS PER IS 4111

Manholes are primarily designed as reinforced cement concrete manholes with special treatment to resist corrosive and adverse environments. Manholes should be built to cause minimum head loss and interference with the hydraulics of the sewer line. One way to maintain a relatively smooth flow transition through the manhole, when a small sewer joins one of a larger diameter, is to match the pipe crown elevations at the manhole. Precast rings for shaft can be done to manage inlet and out portions and house sewer connections through chambers. The structural design of the manholes is performed to withstand traffic loads also with controlled cracking under severe exposure conditions.

ZONE NO	NO OF MANHOLES WITH DEPTH			AVERAGE DEPTH OF CUTTING WITH DEPTH		
	<1.65 m	1.65<D<2.3	D>2.3	<1.65 m	1.65<D<2.3	D>2.3
1	88	196	71	1.12	1.45	4.57
2	361	109	292			
3	985	166	333			
TOTAL	**1434**	**471**	**696**			

TABLE 3.8 DETAILS OF MANHOLES

Situations restricting depth of cutting can be easily got over by restricting the depth of sewers to a practicable limit and diverting the flow into a pavement submersible pump station with a lockable control panel there itself like the pillar boxes of the electricity board and the delivery main can lift the flow to the downstream manhole at the conventional 1 m depth to invert. There are called lifting manholes and during the analysis stage itself the number of such manholes are designed to be minimum.

These submersible pump stations of lifting manholes can be operated by mercury float switches and powered by dedicated feeder lines from the local electrical authority like the lines given to the hospitals, etc. These pump sets can also be connected to solar panels. The pump pit can be covered with pedestrian grade walkway slabs which are of reinforced cement concrete and with adequate lifting arrangements to permit the lowering and lifting the submersible pump sets.

With the advancement in technology, the IoT enabled sensors can be installed in these lift manholes and connected to a remote-control station using cloud data transfer.

The details of pumps in lifting stations is listed as follows:

Pumps in lifting stations					
Zone 1					
Sl No	**Pump No**	**Q in LPS**	**H**	**HP required**	**HP provided**
1	19	0.41	3.81	0.05	0.5
2	37	47.56	4.75	6.69	10
3	8	49.29	5.22	7.62	10
4	29	50.8	3.19	4.80	5
5	12	150.3	4.78	21.29	25
6	13	153.7	5.04	22.95	25
7	14	155.8	4.86	22.44	25
8	15	157.7	5.2	24.30	25
9	28	160.5	5.63	26.77	27
10	17	161.8	3	14.38	15
11	18	163.23	4.65	22.49	25
Zone 2					
1	72	0.34	9.42	0.09	0.5
2	70	24.89	7.42	5.47	5.5
3	74	0.29	4.35	0.04	0.5
4	82	20.49	6.89	4.18	5
5	50	16.85	5.62	2.81	3
6	74	0.29	4.35	0.04	0.5
7	38	0.55	6.6	0.11	0.5
8	37	15.97	5.67	2.68	3
9	31	6.59	5.07	0.99	1
10	16	0.29	6.75	0.06	0.5
11	15	0.88	8.83	0.23	0.5
12	1	0.17	8.05	0.04	0.5
13	17	1.26	5.98	0.22	0.5
14	26	1.39	9.07	0.37	0.5

15	19	0.5	5.89	0.09	0.5
16	35	2.39	9.92	0.70	1
17	120	4.017	6.12	0.73	1
18	50	5.62	5.62	0.94	1
19	36	2.94	9.1	0.79	1
Zone 3					
1	1526	45.62	3.3	4.46	5
2	1525	44.19	3.93	5.15	5.5
3	1535	4.52	6.78	0.91	1
4	1536	6.57	3.74	0.73	1
5	1537	6.77	7.2	1.44	1.5
6	1533	5.27	5.84	0.91	1
7	1532	3.18	7.54	0.71	1
8	1530	1.5	4.63	0.21	0.5
9	1531	0.91	8.9	0.24	0.5
10	1529	1.3	3.96	0.15	0.5
11	1528	7.23	4.21	0.90	1
12	1507	27.45	2.01	1.63	2
13	1506	0.66	8.77	0.17	0.5
14	1505	21.67	4.87	3.13	3.5
15	1496	2.6	5.58	0.43	0.5
16	234	0.2	4.97	0.03	0.5
17	233	9.48	5.17	1.45	1.5
18	217	5.59	5.36	0.89	1
19	7	1.97	5.39	0.31	0.5
20	284	0.2	4.97	0.03	0.5
21	238	1.48	4.95	0.22	0.5
22	1527	1.84	5.64	0.31	0.5
23	1520	19.88	4.13	2.43	2.5
24	1517	19.42	3.07	1.77	2
25	1541	18.56	3.75	2.06	2.5
26	1545	1.43	2.4	0.10	0.5
27	1508	2.81	3.47	0.29	0.5
28	1540	3.93	5.28	0.61	1
29	1522	36.9	3.17	3.47	3.5

30	1523	39.3	7.25	8.44	10
31	1524	40.22	5.83	6.95	7
32	1510	0.87	3.7	0.10	0.5
33	1511	1.89	4.7	0.26	0.5
34	1512	4.23	4.52	0.57	1
35	1513	4.84	5.12	0.73	1
36	1514	6.57	4.1	0.80	1

TABLE 3.9 DETAILS OF PUMPS IN LIFTING STATIONS

3.5 DESIGN OF COLLECTION WELLS

There are three collection wells as per the design for the project area. The details of the collection wells are outlined as follows:

Sl.No.	Description	Location	Peak flow in LPS from network
1	Collection well-1	Near Nila Hospital	46.03
2	Collection well-2	Near Kizhayur Post office	92.49
3	Collection well-3	Near STP at Nambram	164.87

TABLE 3.10 DETAILS OF COLLECTION WELLS

It is planned to collect sewage flow from part of zone 3 to well-1 and sewage load from zone 2 and part of sewage load from zone 3 to well - 2. Sewage from these wells are pumped to large gravity mains located in zone 1 from where it reaches STP. Each collection well is designed to have adequate storage during peak hours of flow. Two submersible centrifugal pumps are provided to work in parallel during peak hours flow or whenever the situation demands for it. The detailed design of the collection wells is presented below:

DESIGN OF COLLECTION WELL No.1 (Near Nila Hospital)				
Average inflow into well from network	**15.34**	LPS		
Peak inflow into well from network	**46.03**	LPS	PF	3.00
Average flow into well from other well	**0**	LPS		
Peak flow into well from other well	**0**	LPS		
Total average inflow into well from network and other well	15.34	LPS		
Total peak inflow into well from network and other well	46.03	LPS		
Peak hours	**4**			
Number of pumps operated in peak hours	**2**			
Rated outflow during peak hours/pump in parallel	22.00	LPS		
Total rated outflow in peak hours	44.00	LPS		
Inflow converted into storage during peak hours	2.03	LPS		
Volume of sewage to be stored in well	29.23	m^3		
Diameter of collection well-inner	**4.5**	m		
Depth of collection well for storage	**2.6**	m		
Volume of sewage actually stored in well	41.35	m^3	ok	
Wall thickness of collection well	**0.45**	m		
Base slab thickness	**0.45**	m		
Offset to base slab	**0.45**	m		
Outer diameter of collection well	5.4	m		
Freeboard of collection well	0.5	m		
Distance of travel in pumping to next station	**180**	m		
Velocity of travel adopted	**0.9**	m/sec		
Diameter of pumping line required	176.42	mm	fix	**200**
		Pipe specification		**DI K9**
Total head for the pump set	**5**	m		
Discharge for the pump set	22.00	LPS	efficiency	**0.45**
Power required for pump set/number	3.26	HP	fix HP	**4**
DESIGN OF COLLECTION WELL No.2 (Near Kizhayur Post office)				
Average inflow into well from network	**30.83**	LPS		
Peak inflow into well from network	**92.49**	LPS	PF	3.00
Average flow into well from other well	**0**	LPS		
Peak flow into well from other well	**0**	LPS		
Total average inflow into well from network and other well	30.83	LPS		
Total peak inflow into well from network and other well	92.49	LPS		
Peak hours	**4**			
Number of pumps operated in peak hours	**2**			
Rated outflow during peak hours/pump in parallel	45.00	LPS		
Total rated outflow in peak hours	90.00	LPS		
Inflow converted into storage during peak hours	2.49	LPS		
Volume of sewage to be stored in well	35.86	m^3		

Diameter of collection well-inner	**5.5**	m		
Depth of collection well for storage	**2.8**	m		
Volume of sewage actually stored in well	66.52	m^3	ok	
Wall thickness of collection well	**0.45**	m		
Base slab thickness	**0.45**	m		
Offset to base slab	**0.45**	m		
Outer diameter of collection well	6.4	m		
Freeboard of collection well	0.5	m		
Distance of travel in pumping to next station	**120**	m		
Velocity of travel adopted	**0.9**	m/sec		
Diameter of pumping line required	252.31	mm	fix OD	**300**
		pressure rating		**PN 10**
Total head for the pump set	**6**	m		
Discharge for the pump set	45.00	LPS	efficiency	**0.45**
Power required for pump set/number	8.00	HP	fix HP	**10**
DESIGN OF COLLECTION WELL No.3 (Near STP)				
Average inflow into well from network	**54.95**	LPS		
Peak inflow into well from network	**164.87**	LPS	PF	3.00
Average flow into well from other well	**0**	LPS		
Peak flow into well from other well	**0**	LPS		
Total average inflow into well from network and other well	54.95	LPS		
Total peak inflow into well from network and other well	164.87	LPS		
Peak hours	**4**			
Number of pumps operated in peak hours	**2**			
Rated outflow during peak hours/pump in parallel	80.00	LPS		
Total rated outflow in peak hours	160.00	LPS		
Inflow converted into storage during peak hours	4.87	LPS		
Volume of sewage to be stored in well	70.13	m^3		
Diameter of collection well-inner	**5**	m		
Depth of collection well for storage	**4**	m		
Volume of sewage actually stored in well	78.54	m^3	ok	
Wall thickness of collection well	**0.45**	m		
Base slab thickness	**0.45**	m		
Offset to base slab	**0.45**	m		
Outer diameter of collection well	5.9	m		
Freeboard of collection well	0.5	m		
Distance of travel in pumping to next station	**120**	m		
Velocity of travel adopted	**0.9**	m/sec		
Diameter of pumping line required	336.42	mm	fix OD	**300**
		pressure rating		**PN 10**
Total head for the pump set	**6**	m		

Discharge for the pump set	80.00	LPS	efficiency	**0.45**
Power required for pump set/number	14.22	HP	fix HP	**15**

TABLE 3.11 DESIGN OF COLLECTION WELLS

3.6 LAYING OF SEWER NETWORK

In the following sections, important matters in connection with the laying of sewer network and making the system efficient is illustrated in detail.

3.6.1 EXCAVATION AND LAYING

1. On all excavation work, safety precautions for the protection of life and property are essential; and measures to avoid too great inconveniences to the public are desirable. Such measures and precautions include the erection and maintenance of signs (to forewarn public), barricades, bridges and detours; placing and maintenance of lights both for illumination and as danger signals; provision of watchmen to exclude unauthorized persons, particularly children from trespassing on the work.
2. Computation of the safe load carrying capacity of the pipe when installed and bedded in the manner to be specified using a suitable factor of safety and making certain the design supporting strength thus obtained is greater than the maximum load to be applied.
3. Sewers may be laid in trenches or under embankment in areas which may be temporarily or permanently submerged in water. The fill load in such cases will be reduced and will correspond to the buoyant weight of the fill material. However, effect of submergence could be ignored which provides an additional factor of safety, but it may be necessary to check whether a pipe is subject to flotation. Under submergence, the minimum height of the fill material that will be required to prevent flotation ignoring the frictional forces in the fill can be determined. Wherever sufficient height of fill material is not available, anti-flotation blocks should be provided.
4. All rigid pipes may be tested for strength in the laboratory by the three-edge bearing test (ultimate load).
5. Width of the trench specified for a particular job should be minimum in consonance with the requirements of adequate working space to allow access to all parts and joints of pipe.

6. The Field Engineer should keep in touch with the Design Engineer throughout the duration of the Project and any deviation from the design assumptions due to the exigencies of work, should be immediately investigated and corrective measures taken in time.
7. All pipes used on the work should be tested as per the IS specifications and test certificates of the manufacturers should be furnished for every consignment brought to the site.
8. Whenever shoring is used, the pulling out of planks on completion of work, should be carried out in stages and this should be properly supervised to ensure that the space occupied by the planks is properly backfilled.
9. Proper backfilling methods both as regards to selection of materials, methods of placing and proper compaction should be in general agreement with the design assumptions.
10. In quicksand conditions, it is necessary to anchor the sewer to the ground and hold it at the grade as laid in the face of soil sinkage.
11. The type of bedding (granular, concrete cradle, full concrete encasement etc.) would depend on the soil strata and depth at which sewer is laid.
12. It is understood that the line (horizontal alignment) and grade layout of a sewer line as per design must be carried out meticulously. The horizontal layout determines the location as well as direction of the sewer line, while slope (grade) of the line provides the necessary hydraulic carrying capacity of the sewerage system.
13. The location of the trench is generally laid out first as an offset line running parallel to the proposed sewer centre line. This offset line is demarcated by wooden stakes driven into the ground surface at intervals of, say, 15 m. The offset line, as is clear, is quite away from the sewer centre line with a view not to allow it being disturbed during construction; however, it must be proximate enough so that the transfer of measurements to the actual trench can readily be done.
14. Two procedures are available to lay pipe sections in the open trench, namely, by batter boards, and by laser beams. Better boards are placed across the trench at uniform intervals. The tops of these boards can be set at some even height above the designed sewer invert elevation. The centre line of the sewer is traced on the boards by extending a line of sight with a transit level or a theodolite and a string is stretched from board to board along this very line. Later on this Line is transferred onto the trench bed by means of a plumb bob. Invert levels and action line is transferred onto the trench bed by means of a plumb bob. Invert levels and characteristics indicated by vertical rods are marked

off in even increments -the lower end of each rod is placed on the pipe invert, and the string over the batter boards helps to check if it matches with the proper elevation mark on the rod, by appropriate adjustment of the pipe placement centre line transferred. In the laser method, advantage is taken of an intense, narrow beam of light that is projected by the laser instrument, over a long distance. This beam is aligned through a sewer pipe to strike a target held at the other end of the pipe. A transit that is placed above a manhole helps establish the alignment of the sewer with reference to field survey points and transfer it down to the laser instrument that is mounted inside the manhole. Lasers can achieve an accuracy of 0.01 per cent over up to 300 m

15. Cross drainage works arise when a sewer must cross another service like electricity, water line, gas piping, telecommunication cable, river courses, nalas, etc.
16. Regarding power cables, the sewer shall be above and apart from the power cable by at least 30 cm as per IS: 1255. Regarding water lines, the sewer shall always travel below the water line. Regarding gas lines, the sewer must travel above the gas line so that sewer gases if they escape need not accidentally set off an ignition of the gas line. Regarding telecommunication cables, lateral separation of at least 30 cm shall be followed. In cases of river crossings and nala crossings each situation shall be decided on its site conditions and gravity sewers may be converted to pumped sewer lines by a low lift dedicated pumping station before the crossing discharging into the gravity section after crossing the water course and this will help in always keeping the pumped sewer visible or close to the ground.
17. A cross connection between water main and sewer main seldom occurs because of the sizes of these mains. However, where the location is complicated, the water mains shall be either blue coloured pipes or painted with blue florescent coloured paint.
18. A minimum offset of equal to half the width of the manhole plus 30 cm shall be the lateral offset between water mains and sewer lines. It is advisable to encase the sewer than the water main.
19. Gravity sewers shall not be laid closer to water retaining structures and the effort should be to detour as far as possible. In case of leakages in sewer joints, the leakage may gain access to the sidewalls of the water retaining structures.
20. The width of trench at and below the top of a sewer should be the minimum necessary for its proper installation with the due consideration to its bedding. The width of a sewer trench depends on the type of shoring (single stage or two stage), working space required in the lower part of the trench and the type of ground below the surface.

21. Excavation for sewer trenches for laying sewers shall be in straight lines and to the correct depths and gradients required for the pipes as specified in the drawings. The material excavated from the trench shall not be deposited very close to the trench to prevent the weight of the materials from causing the sides of the trench to slip or fail. The sides of the trench shall, however, be supported by shoring where necessary to ensure proper and speedy excavation. In case, the width of the road or lane where the work of excavation is to be carried out is so narrow as to warrant the stacking of materials near the trench, the same shall be taken away to a place to be decided by the Engineer-in-Charge. This excavated material shall be brought back to the site of work for filling the trench.
22. In case the presence of water is likely to create unstable soil conditions, a well point system shall be employed to drain the immediate area of the sewer trench prior to excavation operation. A well point system consists of a series of perforated pipes driven or jetted into the water bearing strata on either side of a sewer trench and connected with a header pipe leading to a pump, In the event of excavation being made deeper than necessary, the same shall be filled and stabilized.
23. The shoring shall be adequate to prevent caving in of the trench walls of subsidence of areas adjacent to the trench. In narrow trenches of limited depth, a simple form of shoring shall consist of a pair of 40 to 50 mm thick, and 30 cm wide planks set vertically at intervals and firmly strutted. For wider and deeper trenches, a system of wall plates (Wales) and struts of heavy timber section is commonly used. Continuous sheeting shall be provided outside the wall plates to maintain the stability of the trench walls. The number and the size of the wall plates shall be fixed considering the depth of trench and type of soil.
24. In non-cohesive soils combined with considerable ground water, it may be necessary to use continuous interlocking steel sheet piling to prevent excessive soil movements due to ground water percolation. Such sheet piling shall extend at least 1.5 m below the bottom of the trench unless the lower part of the trench is in fine material. In case of deep trenches, if conditions demand, excavation and shoring may be done in stages.
25. All pipes, ducts, cables, mains and other services exposed due to the excavation shall be effectively supported.
26. Trenches for sewer construction shall be dewatered for the placement of concrete and laying of pipe sewer or construction of concrete or brick sewer and kept dewatered until the concrete foundations, pipe joints or brick work or concrete have cured.

27. Where a sewer must be laid in a soft underground stratum or in a reclaimed land, the trench shall be excavated deeper than what is ordinarily required. The trench bottom shall be stabilized by the addition of coarse gravel or rock. In case of very bad soil the trench bottom shall be filled in with cement concrete of appropriate grade.
28. In the areas subject to subsidence, the pipe sewer should be laid on suitable supports or concrete cradle supported on piles.

3.6.2 SEWER CARRIAGE SYSTEM WITH PIPELINES AND CONNECTIONS TO HOUSES/OTHER UNITS

1. Unlike in the case of CI, DI, UPVC pipe sewers, the HDPE sewers are normally butt welded and pre-assembled on ground and then only laid inside the trench spanning manhole to manhole. The butt welding shall follow the manufacturer's recommendations. Where flanged joints are needed for attaching or inserting fittings and specials like valves, the free end of the HDPE pipe shall be butt welded with a standard flange and thereafter the flanged jointing can be made. However, in the case of such pipes, the uplift during high groundwater conditions above the pipe level is a problem specifically in high ground water and coastal areas. The concrete surrounds or venteak piles shall be used to hold these in place in such conditions, where ground water can rise above the sewer.
2. Each section of sewer shall be tested for water tightness preferably between manholes. To prevent change in alignment and disturbance after the pipes have been laid, it is desirable to backfill the pipes up to the top keeping at least 90 cm length of the pipe open at the joints. However, this may not be feasible in the case of pipes of shorter length, such as stoneware and RCC pipes. With concrete encasement or concrete grade, partial covering of the pipe is not necessary.
3. As soon as a stretch of sewer is laid and tested, a double disc or solid or closed cylinder, 75 mm less in dimension than the internal dimension of the sewer shall be run through the stretch of the sewer to ensure that it is free from any obstruction.
4. Backfilling of the sewer trench is a very important consideration in sewer construction. The method of backfilling to be used varies with the width of the trench, the character of the material excavated, the method of excavation and the degree of compaction required.

5. No trench shall be filled in unless the sewer stretches have been tested and approved for water tightness of joints. However, partial filling may be done keeping the joints open to avoid disturbance.
6. In the design of sewer systems, consideration should be given to the desirability of maintaining velocities sufficient to avoid sulphide build up and of minimizing pressure lines and points of high turbulence. The designer should take into consideration topography, grades of sewers, ventilation, materials of construction, sewage temperature and strength, etc.
7. Any protective coating used should possess the following qualities: (i) it should be resistant to acid attack, (ii) it should bond securely to the concrete, (iii) it should be economical and durable, (iv) it should be resistant to abrasive action by flow of sewage, and (v) when applied, it should be thin enough to fill all pores and irregularities in the surface. The coating should be continuous with no pin holes or other breaks.
8. The house service sewer connections shall be effected only in manholes. The material of the House Service Sewer shall be either UPVC or HDPE rigid straight pipes of 6 kg/cm^2 pressure class in manufacture and as per IS: 15328 and IS: 4984 respectively.
9. The minimum earth cover above the crown shall be 90 cm and where this becomes impossible, the property owner shall be directed to depress his terminal chamber to comply with the above especially as the public sewer manhole shall start at its crown at 100 cm below ground level. Where such sewers cross the electricity power cables, the specifications of IS: 1255 of 1983 reaffirmed in 2001 in clauses 6.3.3 and 6.3.3.1 shall be followed without any exception that all such house service sewers shall be only above the power cable and the minimum clearance shall be 30 cm over the cable which itself shall be covered all around by 15 cm riddled soil and further protected on top by tiles, bricks or slabs.
10. The house owner shall be mandated to possess a “kraite” a type of non-corroding sufficiently flexible but rigid type of less than 10 mm diameter rod, which he/she shall use to rod the house service sewer freely up to the manhole and the labor of the local body shall not be deployed for any removal of obstructions in the house service sewer. Typically, it is possible to effect six service connections to a manhole.
11. It is also recommended to install collection chambers outside a group of houses and collect sewer load through pipes and connect chamber with manholes using pipes.
12. Sewer network system can be made efficient in operation using huge volume data obtained from individual sensors installed in the manholes and lifting points. This

historical data will provide backbone for emergency routing plans for failure of a link or obstructions.

13. Sewer network system must be carefully examined using digital data for potential nodes of weakness or redundancies and specially addressed periodically.
14. There must be continuous coordination between the designer of the sewer network and the engineer in charge of the operation and maintenance of sewer system for addressing issues during repair, expansion of network and diagnostics of blocks.
15. A computer simulation model of the sewer network system must be constantly upgraded with data obtained from sensors for real time monitoring and future predictions of the versatility of the sewer carriage system. Similarly, all lifting manholes must also be continuously monitored in digital platform for performance appraisal and future modifications.

CHAPTER 4

DESIGN OF SEWAGE TREATMENT PLANT

4.1 GENERAL

Sewage is 99% water carrying domestic wastes originating in kitchen, bathing, laundry, urine and night soil. The important waste water contaminants are enlisted below

Sl No	Parameter	Source	Environmental Significance
1	Suspended solids	Domestic use, industrial wastes	Causes sludge deposits and anaerobic conditions in aquatic environment
2	Biodegradable organic	Domestic use, industrial wastes	Causes biological degradation
3	Pathogens	Domestic water	Transmit communicable diseases
4	Nutrients	Domestic and industrial waste	Causes eutrophication
5	Refractory organics	Industrial waste	Causes taste and odour problems

TABLE 4.1 IMPORTANT WASTE WATER CONTAMINANTS

The extent and type of treatment required depends upon the character and quality of both sewage and source of disposal. In the olden times, the waste waters from a community were not so much contaminated as they are today. The urbanization , industrial growth and the improved standards of living have caused increase in strength of municipal

sewage in recent years to a point where dilution alone can no longer be relied upon to prevent the undesirable effects of pollution .

Class	Designated best use	Criteria	Limits
A	Drinking water source without conventional treatment ,but after disinfection	pH Dissolved Oxygen BOD Total coliform MPN/100 ml	6.5-8.5 6 or more 2 or less 50 or less
B	Outdoor bathing	pH Dissolved Oxygen BOD Total coliform MPN/100 ml	6.5-8.5 5 or more 3 or less 50 or less
C	Drinking water source with conventional treatment followed by disinfection	pH Dissolved Oxygen BOD Total coliform MPN/100 ml	6.5-8.5 4 or more 3 or less 5000 or less
D	Propagation of wild life and fisheries	pH Dissolved Oxygen Free Ammonia	6.5-8.5 4 or more 1 to 2 mg/l or less
E	Irrigation, industrial cooling and controlled waste disposal	pH electrical conductivity in micro mhos/cm Sodium Absorption Ratio	6.0 -8.5 <2250 <26

		Boron	<2 mg/l

TABLE 4.2 CLASSIFICATION OF SURFACE WATERS IN INDIA

(All values are in mg/l unless otherwise specified)

Sl No	Parameter	Value in public serwer
1	pH	5.5-9
2	Oil and grease in mg/l	20
3	Ammoniacal nitrogen	50
4	BOD in mg/l	350
5	TSS in mg/l	600

TABLE 4.3 CHARACTERISTICS OF RAW SEWAGE

4.2 WASTE WATER TREATMENT METHODS

The constituents of concern found in wastewater are removed by physical, chemical, and biological methods. The individual methods usually are classified as physical unit operations, chemical unit processes, and biological unit processes. Treatment methods in which the application of physical forces predominate are known as physical unit operations. Examples of **physical unit operations** include **screening, mixing, sedimentation, gas transfer, filtration and adsorption**. Treatment methods in which the removal or conversion of constituents is brought about by the addition of chemicals or other chemical reactions are known as chemical unit processes. Examples **of chemical unit processes include disinfection, oxidation and precipitation**. Treatment methods in which the removal of constituents is brought about by biological activity are known as biological

unit processes. **Biological treatment** is used primarily to remove the biodegradable organic constituents and nutrients in wastewater and occurs by **biological activities of microorganisms** (Metcalf& Eddy, Inc).

CONSTITUENT	UNIT OPERATIONS/PROCESSES
SUSPENDED SOLIDS	SCREENING
	GRIT REMOVAL
	SEDIMENTATION
	CHEMICAL PRECIPITATION
BIODERADABLE ORGANICS	AEROBIC SUSPENDED GROWTH PROCESSES
	AEROBIC ATTACHED GROWTH PROCESSES
	ANAEROBIC SUSPENDED GROWTH PROCESSES
	ANAEROBIC ATTACHDED GROWTH PROCESSES
	CHEMICAL OXIDATION
	MEMBRANE FILTRATION
NITROGEN	CHEMICAL OXIDATION
	SUSPENDED GROWTH NITRIFICATION AND DENITRIFICATION VARIATIONS
PHOSPHOROUS	CHEMICAL TREATMENT
	BIOLOGICAL METHODS
PATHOGENS	DISINFECTION
COLLOIDAL AND DISSOLVED SOLIDS	MEMBRANES
	CHEMICAL TREATMENT
	CARBON ADSORPTION
VOLATILE ORGANIC COMPOUNDS	CARBON ADSORPTION
	ADVANCED OXIDATION
ODOURS	CARBON ADSORPTION
	CHEMICAL SCRUBBERS
	BIOFILTERS

TABLE 4.4 GENERALLY USED TREATMENT METHODS

4.3 COMPONENTS OF SEWAGE TREATMENT SYSTEM

The components of the sewerage treatment system are described in the process flow chart separately attached. The components are listed as follows:

Sl. No.	Description unit	Nature of treatment
1	Receiving chambers	Receive sewage and septage separately
2	Oil and grease trap	Removes oil and scum from sewage and diluted septage
3	Coarse screen channel	Removes impurities of size greater than 20 mm by physical separation using screens
4	Fine screen channel	Removes impurities of size greater than 6 mm by physical separation using screens
5	Grit separator	Removes impurities of size greater than 0.15 mm by gravity settling
6	Flow channels	Gravity sewage flow open channels
7	Equalisation tank	Normalises flow by storing during peak hours and releasing during off peak hours
8	MBBR-1	Biological reactor with suspended and attached growth process for BOD removal from sewage
9	MBBR-2	Biological reactor for nitrification process

10	**MBBR-3**	**Biological reactor for de-nitrification process in post anoxic condition**
11	**MBBR-4**	**Biological reactor for final stage of BOD removal after de-nitrification**
12	**Secondary clarifier with plate settler**	**Clarification of biologically treated water using sludge blanket and plate settler.**
13	**Chlorine contact tank**	**Disinfection of clarified water**
14	**Filter feed tank**	**This is used for holding clarified and disinfected water before pumping to filter units**
15	**Pressure sand filter**	**Filtration of clarified water using sand and anthracite coal dual media for better results**
16	**Activated carbon filter**	**Filtration of clarified water using activated carbon filter**
17	**Treated water tank**	**This unit is used for holding filtered clear water**
18	**Sludge sump**	**Sludge from clarified is collected and transferred to sludge thickener**
19	**Sludge thickener**	**Sludge is thickened in gravity separation and supernatant is directed to equalisation tank**
20	**Centrifuge**	**Thickened sludge is further solidified by centrifugal action in a mechanical equipment**

TABLE 4 .5 COMPONENTS OF A SEWAGE TREATMENT PLANT

4.4 PROPOSED STP SITE

It is proposed to construct STP at Nambram which is located in ward no.19 of Pattambi Municipality where sufficient land owned by municipality is available near river side. Resolution obtained from Municipality is attached as Annexure. As per the soil investigation conducted in the nearby areas of the site the top soil is clayey silty sand followed by sandy silty clay and below this rocky strata at shallow depth. Hence it is proposed to provide end bearing bored cast-in-situ DMC piles for foundation of major civil components, However detailed soil investigation to be conducted for finalization before execution,

4.5 INITIAL COMPONENTS OF TREATMENT

In the following sections, pre-treatment of the raw sewage before entering Equalisation tank is illustrated. The characteristics of the raw sewage and treated sewage are taken from the observation of similar environment adopting conservative values. This is due to the absence of reliable data from the test results of laboratory analysis of samples. The characteristics of the raw sewage and expected treated water is also described below for the design of the STP with Moving Bed Bio Film Reactor (MBBR).

In the following section, the design of pre-treatment units is described in detail. There is a co-treatment unit separately provided to receive septage load collected from various points after desludging activities. The septage is diluted in a water tank with specified dilution ratio to obtain desirable values of COD, BOD and TSS. There are receiving chambers for both septage and sewage loads. Oil and grease trap unit is used to remove oil and grease generated from kitchen and wash water flows. Manual coarse and fine screen channel is used to remove physical impurities of size greater than 20 mm and 6 mm respectively. A grit separator is given to remove fine particles of size 0.15 mm and above. There are odour control units also, especially for the co-treatment units.

4.5.1 DESIGN OF CO-TREATMENT UNITS FOR SEPTAGE

Septage is the liquid and material that is pumped from a septic tank, cesspool, or other treatment facility after it has accumulated over a period of time. A septic tank will usually retain 60 to 70% of the solids, oil and grease that enter it. The scum accumulates at the top and the sludge settles down at the bottom, carrying 20% to 50% of the total septic tank volume when pumped .Septage has an offensive odour and appearance and contains significant levels of grease, grit, hair and debris. It is the host for many disease causing organisms. Septage management plan covers the entire service chain starting from the design of septic tank, collection, conveyance, safe treatment and reuse or safe disposal of septage.

Proper treatment and management of faecal sludge is integral to safe sanitation practices.

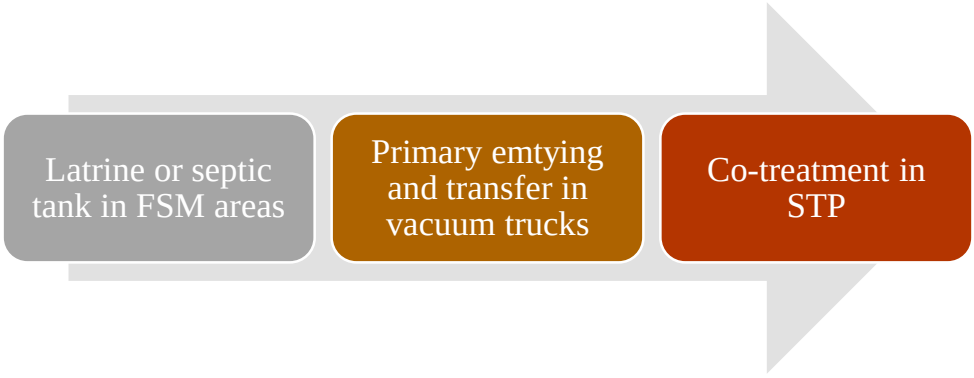

Fig 4.1 SEPTAGE MANAGEMENT

For the areas considered as septage zones, the households, institutions, commercial entities etc., shall undertake de-sludging of the septic tanks and pit once in every three years or when get filled up whichever is earlier as per the NBC code and CPHEEO guidelines. The most satisfactory method of sludge removal is by vacuum tankers. Though de-sludging frequencies vary, it is generally recommended to de-sludge tanks once every two to three years, or when the tank becomes one third full. Periodical de-sludging also helps to reduce the pollution levels in the liquid effluent, which normally enters waterways untreated. However, a small amount of sludge should be left in the tank to ensure that a minimum level of the necessary microorganisms responsible for anaerobic digestion remain in the tank. The gas generated due to anaerobic digestion might escape when tank is open for de-sludging. Hence, it is highly advisable to avoid using fire (or any incendiary material) in these cases. Regular de-sludging activities require well-organized community and public/private service providers. Because of the delicate nature of septic systems housing microbial processes, care should also be taken not to scrub the septic clean or use chemicals such as detergents etc. to avoid the complete destruction of favorable microbes in the tank.

4.5.2 UNIT OPERATIONS IN CO TREATMENT FACILITY

The septage collected and transported to the STP is diluted in the tank by adding recycled water. The normalized values of BOD and TSS are calculated based on test results on samples performed. The detailed design is presented below:

DESIGN OF CO-TREATMENT UNIT FOR SEPTAGE WITH MOVING BED BIOFILM-REACTOR (MBBR)						
Design population	**15970**					
Sludge deposit coefficient	**95**	litres/person/year				
Sludge deposit	4.16	KLD				
Average septage flow	**4.16**	KLD				
Working hours	**24**					
Design flow	4.16	KLD	4160	LPD	4.2	m^3/day
Maximum peak factor expected	**2.5**		4	KLD	0.17	m^3/hour
Peak design flow	10.40	KLD	10400	LPD	10	m^3/day

					0.43	m^3/hour
Number of trips/day	**8**				0.00012	cum/sec
Quantity of septage obtained in single trip with peak factor	1.30	m^3				
Raw Septage Characteristics						
COD	**25000**	mg/l				
BOD	**5000**	mg/l				
TSS	**7000**	mg/l				
Treated Sewage Characteristics (after filtration)						
COD	**50**	mg/l				
BOD	**10**	mg/l				
TSS	**20**	mg/l				
Receiving Chamber						
Average quantity of flow	0.17	m^3/hour				
Peak flow	0.43	m^3/hour				
	0.00012	m^3/sec				
Average Retention Time for peak flow	**600**	sec				
Volume of the inlet chamber	0.0722	m^3	free board	**0.45**	m	
Assumed depth of flow	**1**	m	total height	1.45	m	
Area required for inlet chamber	0.07	m^2	wall thickness	**0.25**	m	
Length of the tank	**1**	m	slab thickness	**0.3**	m	
Breadth of the tank	0.07	fix	**0.5**	m	area in m^2	**1.5**
Design of Dilution Chamber from Mass-balance Principle						
Target outflow BOD (actual incoming BOD to STP)	**265**	mg/l	offset to wall	**0.6**	m	
Target outflow TSS (actual incoming TSS to STP)	**400**	mg/l	free board	**0.85**	m	
Volume of recycled water used for dilution	**30000**	litres	total height	3.35	m	
Quantity of septage obtained as above	1.30	m^3				
BOD of diluted septage	217.25	mg/l	**ok**			
TSS of diluted septage	309.90	mg/l	**ok**			
Total volume of dilution tank	31.30	m^3				
Liquid depth adopted inside dilution tank	**2.50**	m	wall thickness	**0.3**	m	
side of square tank	3.54	m	slab thickness	**0.4**	m	
Length of dilution tank adopted	**3.60**	m				
Breadth of dilution tank adopted	**3.60**	m	ratio of dilution		23.08	
Average outflow from dilution tank	4.17	m^3/hour	volume	32.40	m^3	ok

Average sewage flow entering the STP with diluted septage	225.02	m^3/hour	% of diluted sepatge to sewage			1.85
Oil and Grease Trap						
Average quantity of flow	4.17	m^3/hour				
Peak flow	10.43	m^3/hour				
	0.00290	m^3/sec				
Average Retention Time for peak flow	**300**	sec	offset to wall	**0.15**	m	
Volume of the inlet chamber	0.87	m^3	free board	**0.75**	m	
Assumed depth of flow	**0.8**	m	total height	1.55	m	
Area required for inlet chamber	1.09	m^2	wall thickness	**0.25**	m	
Length of the tank	**1.6**	m	slab thickness	**0.3**	m	
Breadth of the tank	0.68	fix	**0.75**	m	area in m^2	**3.72**
Breadth of baffle wall inside	0.75	m	Area/depth	1.5	1.5 to 2	
Manual Coarse Screen Channel						
Peak design flow	0.00290	m^3/sec				
Number of screen	**1**					
Peak flow rate per screen	0.0029	m^3/sec				
Velocity at peak flow	**0.6**	m/sec	assumed			
Velocity through clean bar screen	**0.65**	m/sec				
Length of channel U/S	**1**	m	wall thickness	**0.25**	m	
Width of channel provided	**0.6**	m	offset to wall	**0.25**	m	
Depth of flow	0.01	m	slab thickness	**0.30**	m	
Area required for screen	0.00	sqm				
Head loss through bar screen	0.00	m	*assuming head loss coefficient = 0.7*			
Assumed depth of flow after inserting bar screen	**0.1**	m	0.01	(control value)		
Width of channel required	0.05	m	fix	**0.6**	m	
Clear bar spacing	**20**	mm	*(20 to 50 mm)*			
Bar thickness	**10**	mm	*(5 to 15 mm)*			
Number of bars	**20**					
Clear bar spacing obtained	21	mm	OK			
Inside width of screen (openings)	0.4	m			area in m^2	**6.4**
Full height of channel	**1.5**	m	Free board	**0.3**		
Angle of inclination	**45**	degree	0.79	rad		

Actual velocity at peak flow	0.57	*(between 0.60 m/sec and 0.90 m/sec)*				
Length of channel required D/S	1.50	m	fix	**3**	m	

TABLE 4.6 DESIGN OF CO TREATMENT UNITS

4.5.3 UNIT OPERATIONS IN STP

As already described considering the diluted septage volume and domestic sewage from households , institutions etc, and including 10% infiltration also, the required capacity for the entire project area is 5.40 MLD. MBBR type sewage treatment plant with tertiary treatment using chlorine is proposed. The detailed design calculations of unit processes in STP is as described below

DESIGN OF STP WITH MOVING BED BIOFILM-REACTOR (MBBR)						
Average flow from network	5.19	MLD				
Working hours	23.5					
Flow from septage dilution tank	4.17	m^3/hour	0.10	MLD		
Design flow	5.40	MLD	5400506	LPD	5401	m^3/day
			5401	KLD	225.02	m^3/hour
Assumed peak factor	2.5					
Peak design flow	13.50	MLD	13501264	LPD	13501	m^3/day
					562.55	m^3/hour
Raw Sewage Characteristics						
Average sewage flow entering the STP	225.02	m^3/hour				
Peak flow entering the STP	562.55	m^3/hour				
COD	500	mg/l				
Primary ST/ET effluent BOD	250	mg/l				

Thickener overflow return as fraction of plant flow	0.15					
Thickener overflow return	0.810	MLD				
Thickener overflow return BOD	350	mg/l				
Centrate from sludge dewatering as fraction of plant flow	0.006					
Centrate from sludge dewatering return	0.03240	MLD				
Centrate from sludge dewatering return BOD	280	mg/l				
Influent BOD to aeration tank	263.1	mg/l				
TSS	400	mg/l				
Total Nitrogen (As N)	50	mg/l				
Total Phosphorous (As P)	8	mg/l				
Faecal Coliform	3.5E+07	mpn/100 ml				
E Coliform	4E+07	mpn/100 ml				
Chlorides as Cl	125	mg/l				
pH	6					
Treated Sewage Characteristics (after filtration)						
COD	50	mg/l				
BOD	10	mg/l				
TSS	20	mg/l				
Total Nitrogen (As N)	10	mg/l				
Total Phosphorous (As P)	1	mg/l				
E Coliform	100	MPN/100 ml				
pH	7					
Receiving Chamber						
Average quantity of flow	225.02	m^3/hour				
Peak flow	562.55	m^3/hour				

	0.1563	m^3/sec				
Average Retention Time for peak flow	180	sec	offset to wall	0.5	m	
Volume of the inlet chamber	28.13	m^3	free board	0.5	m	
Assumed depth of flow	2.1	m	total height	2.6	m	
Area required for inlet chamber	13.39	m^2	wall thickness	0.3	m	
Length of the tank	3.7	m	slab thickness	0.3	m	
Breadth of the tank	3.62	fix	3.7	m	area in m^2	28.09
Oil and Grease Trap						
Average quantity of flow	225.02	m^3/hour				
Peak flow	562.55	m^3/hour				
	0.1563	m^3/sec				
Average Retention Time for peak flow	300	sec	offset to wall	0.5	m	
Volume of the inlet chamber	46.88	m^3	free board	0.75	m	
Assumed depth of flow	2.5	m	total height	3.25	m	
Area required for inlet chamber	18.75	m^2	wall thickness	0.3	m	
Length of the tank	4.75	m	slab thickness	0.45	m	
Breadth of the tank	3.95	fix	4	m	area in m^2	35.56
Breadth of baffle wall inside	4	m				
Manual Coarse Screen Channel						
Peak design flow	0.1563	m^3/sec				
Number of screen	1					
Peak flow rate per screen	0.1563	m^3/sec				
Velocity at peak flow	0.9	m/sec	assumed			

Velocity through clean bar screen	1.15	m/sec				
Length of channel U/S	3.5	m	wall thickness	0.3	m	
Width of channel provided	1.4	m	offset to wall	0.50	m	
Depth of flow	0.12	m	slab thickness	0.30	m	
Area required for screen	0.17	sqm				
Head loss through bar screen	0.04	m	*assuming head loss coefficient = 0.7*			
Assumed depth of flow after inserting bar screen	0.1	m	0.16	(control value)		
Width of channel required	1.74	m	fix	1.75	m	
Clear bar spacing	30	mm	*(20 to 50 mm)*			
Bar thickness	10	mm	*(5 to 15 mm)*			
Number of bars	40					
Clear bar spacing obtained	33	mm	OK			
Inside width of screen (openings)	1.35	m			area in m^2	18.425
height of channel	1	m	fb	0.3		
Angle of inclination	60	degree	1.05	rad		
Actual velocity at peak flow	0.72	*(between 0.60 m/sec and 0.90 m/sec)*				
Length of channel required D/S	0.32	m	fix	2	m	
Mechanical Coarse Screen Channel						
Peak design flow	0.1563	m^3/sec				

Number of screen	1					
Peak flow rate per screen	0.1563	m^3/sec				
Velocity at peak flow	0.9	m/sec	assumed			
Velocity through clean bar screen	1.15	m/sec				
Length of channel U/S	3.5	m	wall thickness	0.3	m	
Width of channel provided	1.4	m	offset to wall	0.50	m	
Depth of flow	0.12	m	slab thickness	0.30	m	
Area required for screen	0.17	sqm				
Head loss through bar screen	0.04	m	*assuming head loss coefficient = 0.7*			
Assumed depth of flow after inserting bar screen	0.1	m	0.75	(control value)		
Width of channel required	1.74	m	fix	1.75	m	
Clear bar spacing	30	mm	*(20 to 50 mm)*			
Bar thickness	10	mm	*(5 to 15 mm)*			
Number of bars	40					
Clear bar spacing obtained	33	mm	OK			
Inside width of screen (openings)	1.35	m			area in m^2	18.425
height of channel	1	m	fb	0.3		
Angle of inclination	45	degree	0.79	rad		
Actual velocity at peak flow	0.72	*(between 0.60 m/sec and 0.90 m/sec)*				

Length of channel required D/S	1.62	m	fix	2	m	
Manual Fine Screen Channel						
Peak design flow	0.1563	m^3/sec				
Number of screen	1					
Peak flow rate per screen	0.1500	m^3/sec				
Velocity at peak flow	0.9	m/sec	assumed			
Velocity through clean bar screen	1.40	m/sec				
Length of channel U/S	2	m	wall thickness	0.25	m	
Width of channel provided	1.4	m	offset to wall	0.15	m	
Depth of flow	0.12	m	slab thickness	0.30	m	
Area required for screen	0.17	sqm				
Head loss through bar screen	0.08	m	*assuming head loss coefficient = 0.7*			
Assumed depth of flow after inserting bar screen	0.1	m	0.20	(control value)		
Width of channel required	1.67	m	fix	1.8	m	
Clear bar spacing	6	mm	*Up to 6 mm*			
Bar thickness	10	mm	*(5 to 15 mm)*			
Number of bars	110					
Clear bar spacing obtained	6	mm	OK			
Inside width of screen (openings)	0.7	m			area in m^2	13
Full height of channel	1.5	m	FB	0.3		
Angle of inclination	60	degree	1.05	rad		

Actual velocity at peak flow	1.06	*(between 0.60 m/sec and 0.90 m/sec)*				
Length of channel required D/S	2.59	m	fix	3	m	
Mechanical Fine Screen Channel						
Peak design flow	0.1563	m^3/sec				
Number of screen	1					
Peak flow rate per screen	0.1563	m^3/sec				
Velocity at peak flow	0.9	m/sec	assumed			
Velocity through clean bar screen	1.40	m/sec				
Length of channel U/S	2	m	wall thickness	0.25	m	
Width of channel provided	1.4	m	offset to wall	0.15	m	
Depth of flow	0.12	m	slab thickness	0.30	m	
Area required for screen	0.17	sqm				
Head loss through bar screen	0.08	m	*assuming head loss coefficient = 0.7*			
Assumed depth of flow after inserting bar screen	0.1	m	0.21	(control value)		
Width of channel required	1.74	m	fix	1.8	m	
Clear bar spacing	6	mm	*Up to 6 mm*			
Bar thickness	10	mm	*(5 to 15 mm)*			
Number of bars	110					
Clear bar spacing obtained	6	mm	OK			

Inside width of screen (openings)	0.7	m			area in m^2	13
Full height of channel	1.5	m	FB	0.3		
Angle of inclination	45	degree	0.79	rad		
Actual velocity at peak flow	1.07	*(between 0.60 m/sec and 0.90 m/sec)*				
Length of channel required D/S	1.50	m	fix	3	m	
Daily screening quantity						
Daily sewage quantity	5400.51	m^3/day				
Rate of screening quantity	0.015	m^3/1000 m^3				
Daily screening quantity	0.0810	m^3/day				
Grit Separator						
Number of grit units	1		Provide 1 standby			
Peak flow	0.1563	m^3/sec				
Flow in one unit	0.1563	m^3/sec				
Grit particle size	0.15	mm				
HRT	60	sec	*(45 to 90 sec, typical 60)*			
Volume of grit chamber	9.38	m^3				
SOR	900	m^3/m^2/day	*(empirical, from observations)*			
	0.010	m^3/m^2/sec				
Area required	15.00	m^2	wall thickness	0.30	m	
SWD	2.60	m	slab thickness	0.30	m	
Side of square channel	3.87	m	offset to wall	0.5	m	

Fix length	3.9	m	freeboard	0.5	m	
Fix width	3.9	m	area given	30.25	m^2	OK
Critical displacement velocity, Vc = Kc*(g*(Ss-1)d)^0.5		m/se				
Kc	4.0000					
Ss	2.6500					
diameter of particle	0.1500	mm				
Vc	0.1971	m/s				
Horizontal velocity of flow, Vh	0.0154	m/sec	ok			
Approach channel for Parshall Flume						
Maximum flow	13.5013	MLD				
Width of throat, W						
(From table provided in CPHEEO manual)	0.1500	m				
Width of approach channel	0.3910	m				
Length of channel	1.5000	m				
Depth of flow	0.61	m				
Free board assumed	0.75	m				
Provide 5x0.5x1.5 as dimensions of the channel for Parshall flume						
Primary Clarifier						
Average flow to primary clarifier	5.40	MLD	5400506	LPD	5401	m^3/day
Detention period at peak	1	hours	*(1.5 to 2.5 hours only for average flow*			
Removal efficiency of TSS expected	50%		*to avoid septic conditions)*			
Overflow rate corresponding to efficiency	57	m3/m2/day	*(from typical graph of experiments)*			
Overflow area at average flow	94.75	m^2	required dia in m			10.98
Height of settling zone	2.38	m				

Diameter of tank	11.46	m	*(settling zone dia+inlet zone+outlet zone)*			
Fix diameter of primary sedimentation tank	11.50	m	volume	849.3	m^3	
Depth of tank required	3.38	m	freeboard	0.50	m	
Wall thickness	0.30	m	offset to wall	0.20	m	
Launder width	0.60	m	launder height	0.45	m	
Launder wall thickness	0.15	m	slab thickness	0.350	m	
Actual detention time for average flow	1.56	hours	OK			
Weir overflow rate at peak flow	149.56	m^3/m.day	OK			
Equalisation tank						
Average design flow	225.02	m^3/hour				
Volume of tank required	1283.00	m3	*from detailed analysis)*			
HRT	5.70	hrs				
SWD	3.3	m				
Area required for equalization tank	388.79	m^2	free board	0.60	m	
Number of tanks proposed	1		offset to wall	0.25	m	
Area required for each tank	388.79	m^2	wall thickness	0.3	m	
Side if square tank	19.72	m	fix length	26	m	
Thickness of foundation slab	0.30	m	fix breadth	15	m	
Actual capacity provided	1287.0	m^3				
					area in m^2	436.31
Sewage pump- for pumping to Equalisation tank						

Number of pumps	1	SB	1			
Type of pump set	submersible centrifugal sewage transfer-non clog					
Average flow	5400.51	m^3/day				
Peak design flow	13501.26	m^3/day				
Working hours	23.5					
Flow capacity of each pump	229.81	m^3/hour				
Peak factor	1.20					
Discharge	76.60	LPS	0.0766	m^3/sec		
Head required	12	m				
Efficiency	55%					
Power required	22.28	HP	fix	25	HP	
Energy	390.67	kwh				

TABLE 4.7 DESIGN OF INITIAL COMPONENTS OF STP

4.6 DESIGN OF MBBR UNITS

Biochemical oxygen demand (BOD) is an indirect measure of the concentration of biodegradable organic matter in water or wastewater. Organic matter (as measured by BOD) is one of the major constituents removed from wastewater in domestic wastewater treatment plants. The reason for being concerned about organic matter in water is its effect on dissolved oxygen in the receiving stream. Dissolved oxygen in water is essential for much of aquatic life, so organic contaminants that affect dissolved oxygen level in water are of concern.

The two major reactions that take place in the organic carbon cycle are biological oxidation of waste organic matter and photosynthesis, which is the process by which green plants produce organic matter from carbon dioxide and water in reactions that are catalysed by sunlight and the chlorophyll in the green plants. Through the biological oxidation process, aerobic

microorganisms utilize oxygen in breaking down organic matter to carbon dioxide and water together with small amounts of other end products.

The photosynthesis and biological oxidation processes can be represented by the following two equations:

Photosynthesis:

CO_2 + H_2O + sunlight → organic plant matter (primarily C, H, & O) + oxygen (this reaction is catalysed by the chlorophyll in green plants)

Biological Oxidation:

Waste organic matter (primarily C, H & O) + O_2 → CO_2 + H_2O + energy

The process takes place as aerobic microorganisms utilize the waste organic matter as their food (energy) source. The process uses oxygen, so if it is taking place in a water body, dissolved oxygen is consumed. A large quantity of organic matter in the water will result in multiplication of microorganisms and rapid removal of dissolved oxygen, leading to oxygen depletion below the level needed by aquatic life. This is also the process that takes place in biological oxidation processes in wastewater treatment plants for removal of organic matter from the incoming wastewater.

The MBBR process for wastewater treatment was invented and initially developed by Professor Hallvard Ødegaard in the late 1980s at the Norwegian University of Science and Technology. Use of this wastewater treatment process has spread rapidly.

The MBBR process is an attached growth biological wastewater treatment process. That is, the microorganisms that carry out the treatment are attached to a solid medium, as in trickling filter or RBC systems. By contrast, in a suspended growth biological wastewater treatment process, like the activated sludge process, the microorganisms that carry out the treatment are kept suspended in the mixed liquor in the aeration tank. In the conventional attached growth biological treatment processes, like trickling filter or RBC systems the microorganisms are attached to a medium that is fixed in place and the wastewater being treated flows past the surfaces of the medium with their attached biological growth which are described in more detail in the next section. The MBBR treatment processes typically take place in a tank like an activated sludge aeration tank. In contrast, an MBBR process utilizes small plastic carrier media, which are kept suspended by a diffused air aeration system for an aerobic process or by

a mechanical mixing system for an anoxic or anaerobic process. A sieve is typically used at the tank exit to keep the carrier media in the tank.

MBBR processes use plastic media support carriers like those shown in Figure 11. As shown in Figure, the carrier is typically designed to have a high surface area per unit volume, so that there is a lot of surface area on which the microorganisms attach and grow. Two properties of the carrier are needed for the process design calculations are the specific surface area in m^2/m^3 and the void ratio. The specific surface area of MBBR carriers is typically in the range from 350 to 1200 m^2/m^3 and the void ratio typically ranges from 60% to 90%. Design values for these carrier properties should be obtained from the carrier manufacturer or vendor (Harlan H. Bengtson).

The MBBR wastewater treatment process is quite flexible and can be used in several different ways:

1. Single stage BOD removal 2. Two stage BOD removal 3. Two stage BOD removal and Nitrification 4. Single stage tertiary Nitrification 5. Pre-Anoxic Denitrification 6. Post-Anoxic Denitrification (Harlan H. Bengtson).

The idea behind the development of the moving bed biofilm process was to adopt the best from both the activated sludge process and the bio filter processes without including the worst. Contrary to most biofilm reactors, the moving bed biofilm reactor utilizes the whole tank volume for biomass growth, as does also the activated sludge reactor. Contrary to the activated sludge reactor, it does not need any sludge recycle, as also the case in other biofilm reactors. This is achieved by having the biomass grow on carriers that move freely in the water volume of the reactor, kept within the reactor by a sieve arrangement at the reactor outlet. Since no sludge recirculation takes place, only the surplus biomass must be separated – a considerable advantage over activated sludge process. The reactor may be used for both aerobic, anoxic or anaerobic processes (H. Ødegaard).

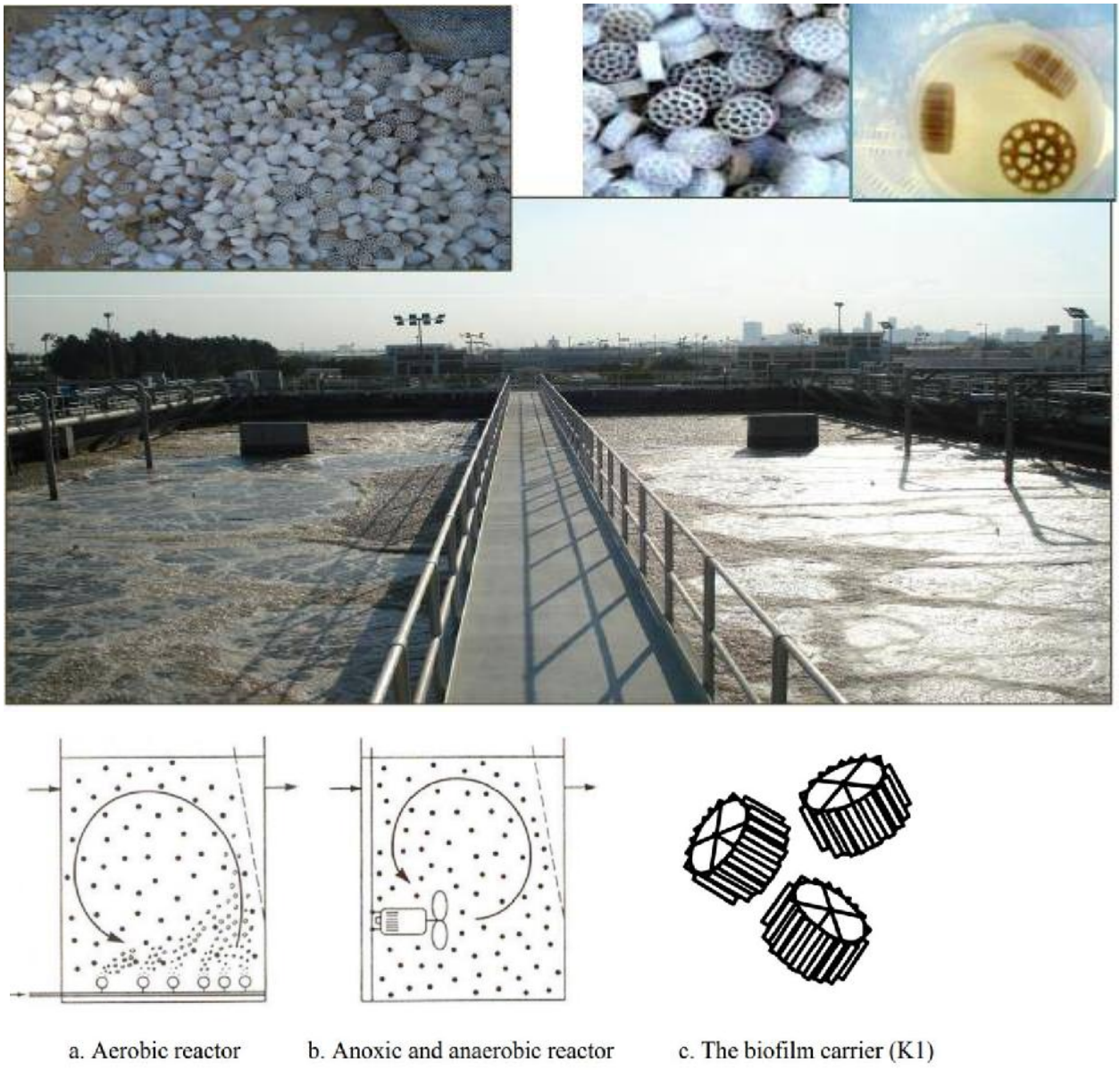

Fig 4.2 MBBR CARRIER MEDIA IN MBBR TANK

The key design parameter for sizing the MBBR tank is the surface area loading rate (SALR), typically with units of g/m^2 /day, that is g/day of BOD coming into the MBBR tank per m^2 of carrier surface area. Using design values for wastewater flow rate and BOD concentration entering the MBBR tank, the loading rate in g BOD/day can be calculated. Then dividing BOD loading rate in g/day by the SALR in g/m^2 /day gives the required carrier surface area in m^2. The carrier fill %, carrier specific surface area, and carrier % void space can then be used to calculate the required carrier volume, tank volume and the volume of liquid in the reactor (Harlan H. Bengtson).

To carry out de nitrification of a wastewater flow (removal of the nitrogen from the wastewater), it is necessary to first nitrify the wastewater, that is, convert the ammonia nitrogen typically present in the influent wastewater to nitrate. Nitrification will only take place at a reasonable rate if the BOD level is quite low. Thus, an MBBR de nitrification process will need a reactor for BOD removal, one for nitrification, and one for de nitrification. The nitrification reactor will always follow the BOD removal reactor, because of the need for a low BOD level in the nitrification reactor. The de nitrification reactor may be either before the BOD removal reactor (called pre-anoxic de nitrification) or after the nitrification reactor (called post-anoxic de nitrification).

The de nitrification reactions, which convert nitrate ion to nitrogen gas, and hence remove it from the wastewater flow, will take place only in the absence of oxygen, that is, in an anoxic reactor. Also, the de nitrification reactions require a carbon source. In a pre-anoxic de nitrification process, the BOD in the primary effluent wastewater is used as the carbon source for de nitrification. In this process, however the primary effluent entering the pre-anoxic reactor still has ammonia nitrogen present rather than the nitrate nitrogen needed for de nitrification.

In a post-anoxic de nitrification process, the influent to the de nitrification reactor comes from the nitrification reactor, so the wastewater influent ammonia nitrogen has been converted to nitrate as required for de nitrification. The BOD has also been removed prior to the post anoxic de nitrification reactor, however, so an external carbon source is required for the de nitrification reactions.

The pre-anoxic de nitrification process has the advantage of not requiring an external carbon source and it reduces the BOD load to the BOD removal part of the process because BOD is used in the de nitrification reactions. However, the pre-anoxic process requires an influent C/N ratio greater than 4, where C/N is taken to be BOD/TKN, and the post-anoxic process can achieve a more complete nitrogen removal. In the present project, post-anoxic de-nitrification process is adopted to address the issues expected during the occurrence of higher values of total nitrogen in the incoming sewage load.

At each operation in reactor, the influent and effluent characteristics are monitored and if possible after de-nitrification the effluent can be directly taken for clarification. Also, there are provisions for bypassing de-nitrification reactor also. However, all these decisions largely depends upon the operational efficiency and continuous monitoring of the parameters in effluent at each stage.

4.6.1 PROCESS ANALYSIS AND DESIGN

The layout of different components and process flow diagram are shown as Appendix.

The design calculations is described as follows

Moving Bed Bio-Reactor (MBBR)-Single Stage BOD Removal						
Average design flow	5400.51	m^3/day				
Number of streams	1					
BOD of incoming sewage	263.13	mg/l				
TSS of incoming sewage	400	mg/l				
BOD expected after treatment	10	mg/l				
BOD to be removed	253.13	mg/l				
BOD removal % expected	96.20					
Number of tanks proposed	1					
BOD loading rate/volume	4	kg/m^3/day	*4-7kg/m^3/day as per M&E*			
Actual BOD loading rate	1421.04	kg/day				
Quantity of BOD to be removed per day	1367.04	kg/day				
Volume of reactor required	355.26	m^3				
Surface area loading rate (SALR) for BOD removal	7.50	g/m^2/day				
Required carrier surface area	189472.41	m^2				
Specific surface area of carrier	500.00	m^2/m^3				

Required carrier volume	378.94	m^3				
Volume of media required	40%					
	142.10	m^3	depth of base	0.9	m	
Volume of tank required-BOD loading rate/volume method	497.37	m^3	slab thickness	0.35	m	
Volume of tank required- SALR method	947.36	m^3	offset to wall	0.25	m	
Volume of each tank	947.36	m^3	total height	4.10	m	
SWD	3.6	m	wall thickness	0.30	m	
Area of each tank	263.16	m^2				
Side of square tank	16.22	m	breadth	16.9	m	
Actual capacity provided-rectangular	1028.20	m^3	length	16.9	m	
Fix capacity	1028.20	m^3				
Actual volume of media obtained	411.28	m^3				
Actual carrier surface area	205639.20	m^2				
Volume of liquid in the tank	863.68	m^3				
Hydraulic Retention Time at design average flow	3.84	hours	230.3	minutes		
Hydraulic Retension Time at peak flow	1.54	hours	92.1	minutes		
SARR for the given SALR	6.94	$g/m^2/day$			area in m^2	324.00
Estimated BOD removal rate	1426.62	kg/day				
Actual BOD removal rate %	100.39	BOD of effluent				
Moving Bed Bio-Reactor (MBBR)-Single Stage Nitrification						

Average design flow	5400.51	m^3/day				
Number of streams	1					
BOD of incoming sewage	20.00	mg/l				
NH_4-N of incoming sewage	50.00	mg/l				
Alkalinity as $CaCO_3$	200.00	mg/l				
Target effluent NH_3-N	3.30	mg/l	% removal	93.40		
DL level to be maintained in tank	3.00	mg/l				
Design minimum waste water temperature	20.00	^{o} C				
$SARR_{max}$	0.88	g/m2/day	SARR temp coefft. Ɵ		1.058	
Minimum NH_3-N at $SARR_{max}$	0.80	mg/l	$SARR_T$	1.17	g/m^2/day	
Design value of SALR	1.25	g/m^2/day				
NH_3-N loading rate	270.03	kg/day				
Required carrier surface area	216192.33	m^2/day				
Specific surface area of carrier	500.00	m^2/m^3				
Required carrier volume	432.38	m^3/day	depth of base	0.65	m	
Volume of media required	40%		slab thickness	0.35	m	
Volume of tank required- SALR method	1080.96	m^3	offset to wall	0.25	m	
Volume of each tank	1080.96	m^3	total height	4.10	m	
SWD	3.6	m	wall thickness	0.30	m	
Area of each tank	300.27	m^2	length	17.4		
Side of square tank	17.33	m	breadth	17.4	m	
Actual capacity provided-rectangular	1089.94	m3	OK			

Fix capacity	1089.94	m^3				
Actual volume of media obtained	435.97	m^3				
Actual carrier surface area	217987.20	m^2			area in m^2	342.25
Volume of liquid in the tank	915.55	m^3				
Hydraulic Retention Time at design average flow	4.07	hours	244.12	minutes		
Hydraulic Retention Time at peak flow	1.63	hours	97.65	minutes		
BOD SALR	0.50	$g/m^2/day$	*should be < 0.5 to achieve good nitrification*			
Influent alkalinity	200.00	mg/l				
Target effluent alkalinity	80.00	mg/l				
Alkalinity used for Nitrification	7.14	g $CaCO_3$/g NH_3-N				
Alkalinity to be added	213.44	mg/l				
Rate of alkalinity addition needed as $CaCO_3$	1152.67	kg/day				
Equiv wt. of $CaCO_3$	50.00	g/equivalent				
Equiv wt. of $NaHCO_3$	84.00	g/equivalent				
Daily $NaHCO_3$ requirement	1936.49	kg/day $NaHCO_3$				
Moving Bed Bio Reactor (MBBR)-post-anoxic denitrification						
Carbon:Nitrogen ratio (C/N)	5.26					
Average design flow	5401	m^3/day				
Number of post-anoxic tanks	1.00					

Target effluent NO_3-N concentration	3.30	mg/l				
SALR for post-anoxic stage	2.00	g NO_3 N /m^2/day				
Estimate of SARR/SALR ratio	0.886	mg/l				
Target % N removal	93.40					
Specific surface area of carrier	500.00	m^2/m^3				
NO_3-N daily loading rate	252.20	kg/day				
Required carrier surface area	126101.8	m^2				
Required carrier volume	252.20	m^3				
Volume of media required	40%		depth of base	0.65	m	
Volume of tank required- SALR method	630.51	m^3	slab thickness	0.3	m	
Volume of each tank	630.5	m^3	offset to wall	0.25	m	
SWD	3.6	m	total height	4.10	m	
Area of each tank	175.14	m^2	wall thickness	0.30	m	
Side of square tank	13.23	m	length	13.3	m	
Actual capacity provided-rectangular	636.80	m^3	Breadth	13.3		
Fix capacity	636.80	m^3	OK			
Actual volume of media obtained	254.72	m^3				
Actual carrier surface area	127360.00	m^2				
Volume of liquid in the tank	534.91	m^3				
Hydraulic Retention Time at design average flow	2.38	hours	142.63	minutes		

Hydraulic Retention Time at peak flow	0.95	hours	57.05	minutes		
SARR	1.77	$g/m^2/day$				
Estimated NO_3-N removal rate	225.71	kg/day				
NO_3-N of effluent	4.91	mg/l				
Alkalinity produced by denitrification	3.57	g $CaCO_3$/g NO_3-N removed				
Actual alkalinity to be added	64.23	mg/l				
Rate of alkalinity addition needed as $CaCO_3$	346.89	kg/day				
Equiv wt. of $CaCO_3$	50.00	g/equivalent				
Equiv wt. of $NaHCO_3$	84.00	g/equivalent				
Daily $NaHCO_3$ requirement	582.77	kg/day $NaHCO_3$				
4.6 lb COD/lb NO_3-N removed and 1.5 lb COD/lb Methanol. The required methanol dosage is then calculated as: 4.6/1.5 = 3.1 lb methanol /lb NO_3-N removed. The methanol requirement in lb/day is then equal to 3.1 times the previously calculated NO_3-N removal rate						
Methanol requirement in kg/day	781.83	kg/day				
Considering toxicity, economy and safety considerations it is better to adopt retrun activated sludge feed into anoxic tank for carbon source. Alkaline fermentation can be adopted for better results.						
Design of mechanical mixer for denitrification tank						
Capacity of de-nitrification tank provided	636.80	m^3				
Hydraulic Retention Time	2.38	hours				
Mixing rate	0.5	m^3/hour				
Capacity of mixer	535.76	m^3/hour				

Power transferred in mixing	5	Watts/m^3				
Power required for mixer	3.59	HP	fix	4	HP	
Energy	70.12	kwh				
Moving Bed Bio-Reactor (MBBR) chamber after de-nitrification						
Average design flow	5400.51	m^3/day				
Number of streams	1					
BOD of incoming sewage (including return activated sludge as carbon source)	86.83	mg/l				
TSS of incoming sewage	50	mg/l				
BOD expected after treatment	7	mg/l				
BOD to be removed	79.83	mg/l				
BOD removal % expected	91.94					
Number of tanks proposed	1					
BOD loading rate/volume	4	kg/m^3/day	*4-7 kg/m^3/day as per M&E*			
Actual BOD loading rate	468.94	kg/day				
Quantity of BOD to be removed per day	431.14	kg/day				
Volume of reactor required	117.24	m^3				
Surface area loading rate (SALR) for BOD removal	15.00	g/m^2/day				
Required carrier surface area	31262.95	m^2				
Specific surface area of carrier	500.00	m^2/m^3				

Required carrier volume	62.53	m^3				
Volume of media required	35%					
	41.03	m^3	depth of base	0.45	m	
Volume of tank required-BOD loading rate/volume method	158.27	m^3	slab thickness	0.35	m	
Volume of tank required- SALR method	178.65	m^3	offset to wall	0.25	m	
Volume of each tank	178.65	m^3	total height	4.10	m	
SWD	3.6	m	wall thickness	0.30	m	
Area of each tank	49.62	m^2				
Diameter of circular tank	7.95	m	length	8	m	
Side of square tank	7.04	m	breadth	8	m	
Actual capacity provided-rectangular	230.40	m^3	OK			
Fix capacity	230.40	m^3				
Actual volume of media obtained	80.64	m^3				
Actual carrier surface area	40320.00	m^2				
Volume of liquid in the tank	198.14	m^3				
Hydraulic Retention Time at design average flow	0.88	hours	52.8	minutes		
Hydraulic Retention Time at peak flow	0.35	hours	21.1	minutes		
SARR for the given SALR	13.13	$g/m^2/day$			area in m^2	82.81
Estimated BOD removal rate	529.20	kg/day				

Actual BOD removal rate %	112.85	BOD of effluent		-11.16	mg/l	ok
Blower air requirement						
BOD loading	1507.88	kg/day				
NH_3-N loading rate	270.03	kg/day				
Oxygen uptake ratio-BOD	1.50	kg of O_2/kg of BOD				
Oxygen uptake ratio-NH_3-N	4.57	kg of O_2/kg of NH_3-N				
Oxygen required for BOD loading	2261.81	kg/day				
Oxygen required for NH_3-N loading	1234.02	kg/day				
Percentage of O_2 in air	21.00					
Weight of air required-BOD loading	10770.55	kg/day				
Weight of air required-NH_3-N loading	5876.26	kg/day				
Density of air	1.225	kg/m^3				
Volume of air-BOD loading	8792.28	m^3/day				
Volume of air-NH_3-N loading	4796.95	m^3/day				
Air transfer efficiency of diffuser	0.075					
Quantity of air required-BOD loading	117230.43	m^3/day				
Quantity of air required-NH_3-N loading	63959.34	m^3/day				
Factor of saftey	1.20					
Volume of air required-BOD loading	5861.52	m^3/hour				
Volume of air required-NH_3-N loading	3197.97	m^3/hour				

Volume of equalisation tank	1287.00	m^3				
Normal inflow	0.063	m^3/sec				
Air requirement for equalisation tank	1.25	m^3/m^3/hour				
Air requirement for sludge tank	3.00	m^3/m^3/hour				
Volume of ET	1287.00	m^3				
Volume of air required for ET	1608.75	m^3/hour				
Volume of air required for ST	42.11	m^3				
Total air required	10710.35	m^3/hour				
Capacity of blower	10710.00	m^3/hour				
Number of blowers working	2.00	SB	1			
Air required per blower	5355.00	m^3/hour				
Pressure given	0.60	kg/cm^2	5.89	m		
Volumetric efficiency	60%					
Power required for blower motor	195.92	HP	146.16	kw		
Fix power of blower motor	200.00	HP				
Energy	7161.60	kwh				

TABLE 4.8 UNIT PROCESSES IN MBBR

4.7 CHEMICAL UNIT PROCESSES

In the following sections, flocculation and clarification processes are described for the effluent from MBBR tanks. To achieve high degree of clarification, up flow hopper bottom type clarifier is used. The upper portion of the clarifier consists of the rectangular vessel in which tube settlers/plate settlers are installed for particle removal. Alum and Lime dosing is used for formation of aggregates or flocs from finely divided particles and

from chemically destabilized particles. The settling of discrete, non-flocculating particles can be analyzed by means of the classic laws of sedimentation formed by Newton and Stokes. The clarified is designed based on the various aspects of theory of sedimentation.

Secondary Clarifier with Plate/Tube Settler						
Average output required from tube settler in MLD	5.396	224.85	m^3/hour	62.46	LPS	
Number of batteries	**1**					
Average design flow as input in MLD/unit	5.40	224.85	m^3/hour	62.46	LPS	
Width of plates in mm	**900**	space between plates		**20**	mm	23.10
Length of plates adopted in m	**0.75**					
Angle of inclination of tubes adopted in deg.	**60**	1.05	rad			
Relative length of settler (dimensionless) Lr = L/d	37.5		wall thickness	**0.35**	m	
Relative length is changed by L' = 0.058 x [Vo x d/v]			column size	**0.35**	m	page 632
Where Vo is velocity of flow along tube settler			offset to wall	**0.25**	m	
v is kinematic viscosity of water						
Effective relative length of tube, L = Lr- [0.058 x Vo x d/v]			slab thickness	**0.35**	m	
Kinematic viscosity of water in m/day	0.087264		r-beam depth	**0.6**	m	
Effective relative length of tube/plate , L	37.5	(-)	0.013	Vo		
	35.01		top channel-t	**0.20**	m	
desirable value of relative length =	*around 20 but below 40*		top channel-w	**0.45**	m	
for one unit:			top channel-d	**0.60**	m	

Vertical water height in chamber in m	**3**		freeboard	**0.5**	m	
Height of chamber in hopper portion in m	**3**		t-beam width	**0.425**	m	
Side of large square in m	**9.6**		t-beam depth	**0.45**	m	
Side of small square in m	**5.4**		r-beam width	**0.425**	m	
h_3 in m (height of the truncated cone)	3.86		inlet pipe dia	**0.25**	m	
Angle of inclination of hopper side to vertical	34.990	degree				
Larger inclined length L_i of slanting slab in m	8.37	area in m^2	40.18			
Smaller inclined length l_i of slanting slab in m	4.71	area in m^2	12.71			
Contact area in m^2	109.86					
SOR in m^3/m^2/day for up flow clarifier	**49.12**	<	**50**			
Trial volume in m^3 of one unit	447.91	volume of hopper in m^3			171.43	
Detention time in hours	1.99	in square	1.23	in hopper	0.76	hours
Fix volume	**447.91**	m^3				
Performance parameter of tube settler S = Vs/Vo x [sinθ + L x cosθ]						
For laminar flow regime, critical performance parameter value for complete removal of particle,						
Critical value of performance parameter, Sc =	1.333	circular				
	1.375	square				
	1	parallel plates				

Particle size in mm	**0.025**					
Settling velocity of particle in m/sec, V_s (laminar)	0.0006	m/sec	48.08	m/d		
Reynolds number, Nr	0.014					
Trial value of flow along plate settler V_o in m/day	**187**					
Shape of cross section of tubes	**plates**	(square, circular, or plates)				
Critical of performance parameter obtained, Sc	[(Vs/Vo) x (sinθ+Lcosθ)					
	4.73					
Plate entrance area/one unit	28.26	m^2				
Number of modules of plates	**4**					
Number of plates required/module	392.45					
Fix number of plates required/module	**393**					
Length/module of tray holding plates	**9600**	mm				
Thickness of plate	**1.3**	mm				
Number of plates configured in one module	394.42	OK				
Height of plate module for 1m length of tubes inclined:	0.87					
Hence height of tube module	0.65	m				
Fix length of plate module	**0.75**	m				
Fix height of plate module	**0.65**	m				
Fix number of plates required per module	**392**					
Angle of inclination	60	degree to horizontal				
Contact area	1058.4	m^2			area in m^2	**116.64**
SOR in m^3/m^2/day for plate settler	**4.99**	<	**40**			
Total plate entrance area	28.22	m^2				
Actual velocity of flow in m/day	187.22					

Alum solution tank					
number of units	**2**	1W+1Standby			
dosage of alum	**80**	ppm			
average flow	225.700	m3/hr			
Solution strength assumed	5	%			
Volume of tank required	**2.89**	m3			
liquid depth assumed	**1.2**	m			
side of square required	1.55	m			
total depth incl freeboard	**1.5**	m			
solution flow rate	0.3611	m^3/hour			
Lime solution tank					
number of units	**2**	1W+1Standby			
dosage of lime	**35**	ppm			
average flow	225.700	m3/hr			
Solution strength assumed	5	%			
Volume of tank required	**1.26**	m3			
liquid depth assumed	**1.2**	m	say		
side of square required	1.03	m	1.05	m	
total depth incl freeboard	**1.5**	m			
solution flow rate	0.1580	m^3/hour			

TABLE 4.9 CHEMICAL UNIT PROCESSES

4.8 DESIGN OF FILTER FEED, CHLORINE CONTACT UNITS AND PRESSURE FILTERS

Pressure filters are used for treatment of the clarified water in the next stage. Pressure Sand Filter is used for removal of suspended solids and turbidity from the effluent from clarifier. Clarified water is passed through the pressure sand filter, the filter media (Fine quartz sand) is supported on gravel and pebbles bed of progressively larger sizes. During the filtration cycle, the filter bed retains the dirt and

suspended particles from the water and accumulates within the filter bed. Clear water can be collected from the outlet of filter. Frequent backwashing of the media is also required.

Activated carbon filter process basically absorbs unwanted contaminants from wastewater. Activated carbon is initially treated with oxygen. This helps the charcoal open millions of tiny pores. Activated carbon is highly effective when it comes to absorption of contaminants from water. Filtration process includes activated carbon to remove the residual contaminants from sewage. Carbon absorbs micro pollutants such as chlorine, methane, organic compounds, and even the taste and odour from water. Activated carbon filter removes chlorine from wastewater. It has a large surface area which makes it highly effective to absorb contaminants from wastewater. Activated carbon needs replacement as its capacity to work reduces gradually. This process involves a low operating cost. Carbon in the activated carbon filter process also absorbs organic compounds. The capacity of this process will depend on the physical properties of the surface area of the activated carbon, the amount of hydrogen and oxygen contents, the concentration level of the impurities, duration of the treatment, and of course the pH level of the water used . Using filter feed pump sets, from the fitter feed tank the effluent is fed to the pressure sand and activated carbon filter units.

Chlorination is provided for disinfection of final effluent and for this purpose chlorine contact tank is provided.

The detailed design calculations of the above processes is described below

Chlorine contact tank						
HRT	30	minutes	offset to wall	0.2	m	
Average flow	225.02	m^3/hour	wall thickness	0.3	m	
Volume of tank	112.51	m^3	slab thickness	0.35	m	
Assumed liquid depth	2	m	freeboard	0.5	m	
Area of the tank	56.26	m^2			area in m^2	73.96
side of square tank	7.50	m	fix	7.6	m	
Filter feed tank						
HRT	20	minutes	offset to wall	0.3	m	

Average flow	225.02	m^3/hour	wall thickness	0.25	m	
Volume of tank	75.01	m^3	slab thickness	0.3	m	
Assumed liquid depth	2	m	freeboard	0.35	m	
Area of the tank	37.50	m^2				
side of square tank	6.12	m	fix	6.2	m	
			fix breadth	6.2	m	
Volume provided	76.88	OK			area in m^2	53.29
Pressure Sand Filter						
Average flow	5400.51	m^3/day				
Filter operating hours	23.5	hours				
Operating flow	229.81	m^3/hour				
Filter Loading Rate	12	m^3/m^2/hour				
Area of the filter required	19.15	m^2				
Number of filters	4					
Area of each filter	4.79	sqm				
Diameter of filter required	2.47	m	fix	2.5	m	
Height of the filter	3	m				
Operating pressure	3.5	Bar				
Filter media	Sand				area in m^2	29.45
Activated Carbon Filter						
Average flow	5400.51	m^3/day				
Filter operating hours	23.5	hours				
Operating flow	229.81	m^3/hour				
Filter Loading Rate	10	m^3/m^2/hour				
Area of the filter required	22.98	m^2				
Number of filters	4					
Area of each filter	5.75	sqm				
Diameter of filter required	2.70	m	fix	2.75	m	
Height of the filter	3	m				

Operating pressure	3.5	Bar				
Filter media	Activated Carbon				area in m^2	23.76
Pump for clarified water to PSF and ACF						
Type of pump set	CF					
Number of pumps	2.00	W	SB	1		
Discharge of clarified water required	225.02	m^3/hour				
Working hours of pumps	20.00	hours				
Discharge required	135.01	m^3/hour	3.8E-02	m^3/sec		
Head required	10.00	m				
Efficiency	50%					
Power required	10.00	fix	35.50	HP		
Energy	298.43	kwh				
Treated Water Tank						
HRT	60	minutes	offset to wall	0.2	m	
Average flow	225.02	m^3/hour	wall thickness	0.25	m	
Volume of the tank	225.0	m^3	slab thickness	0.3	m	
Assumed liquid depth	2.5	m	freeboard	0.5	m	
Area of the tank	90.01	m^2				
Number of tanks	1		fix length	9.5	m	
Area of one tank	90.01	m^2	fix breadth	9.5	m	
Side of square tank	9.49	m				
Volume provided	225.63	m^3	OK			
Total area of units	1129.57	m^2			area in m^2	108.16

TABLE 4.10 FINAL TREATMENT PROCESSES

4.9 PLAN OF SAFE REUSE OF TREATED WATER

In the planning and implementation of water reclamation and reuse, the reclaimed water application will usually govern the wastewater treatment needed to protect public health and the environment, and the degree of reliability required for the treatment processes and operation (Metcalf and Eddy). The major wastewater re use categories are as follows:

a] agricultural irrigation, crop irrigation and commercial nurseries

b] land scape irrigation

c] industrial recycling and reuse

d] ground water recharge, groundwater replenishment and saltwater intrusion control

e] recreational/environmental uses

f] non- potable urban uses

e] potable reuse

In the present project, the treated water will be suitable for the above purposes, however not intended for potable reuse due to health and aesthetic reasons and dewatered sludge can be used as a manure for cultivating vegetables and other plant life.

4.10 SLUDGE DISPOSAL PLAN

Sludge is generated in primary, secondary and advanced wastewater treatment processes. Primary sludge consists of settleable solids carried in the raw wastewater. Secondary sludge consists of biological solids as well as additional settleable solids. In the treatment system, facility for thickening and dewatering of sludge is provided . This is to stabilize the sludge and generate an efficient sludge disposal mechanism. Thickening is a procedure used to increase the solids content of sludge by removing a portion of the liquid fraction. Thickening is generally accomplished by physical means like gravity settling and it is adopted in the present system. Whereas centrifuges are used to thicken and dewater sludges. Thickening by centrifugation involves the settling of sludge particles under the influence of centrifugal forces. The design of various components of sludge handling units are illustrates as follows:

Sludge Sump						
Average flow	5400.51	m^3/day				
TSS	400	mg/l				
BOD	263.13	mg/l				
Assumed TSS Sludge	**30%**					
Assumed BOD Sludge	**35%**					
Sludge generated-TSS	648.1	kg/day				
Sludge generated-BOD	497.4	kg/day				
Total sludge	1145.43	kg/day				
% sludge with 1.02 specific gravity	**10%**					
Sludge volume per day	112.30	m^3/day				
	4.68	m^3/hour				
Assumed HRT	**3**	hours	freeboard	**0.5**	m	
Volume of tank	14.04	m^3	slab thickness	**0.3**	m	
Assumed SWD	**1.5**	m	offset to wall	**0.75**	m	
Area of the tank	9.36	m^2	wall thickness	**0.3**	m	
Diameter of circular tank	3.45	m	fix	**3.5**	m	
Actual capacity provided	14.43	m^3			area in m^2	**24.63**
Pump for Sludge transfer to Thickener						
Number of pumps	**1.00**	W	**1**	SB		
Specific gravity of liquid	**1.03**					
Type of pump set	submersible centrifugal sewage transfer-non clog					
Working hours	**5.00**	hours				
Discharge required	22.46	m^3/hour	0.006239	m^3/sec		

Required head	**15.00**	m				
Velocity in sludge transfer pipe adopted	**0.70**	m/sec				
Pipe diameter required	106.53	mm	fix	**110**	mm	
Efficiency	**50%**					
Power required	2.50	HP	fix	**2.50**	HP	
Energy	9.31	kwh				
Sludge Thickener						
Number of units	**1**					
Total sludge	1145.43	kg/day				
Solids Loading Rate	**40**	$kg/m^2/day$				
Thickening area required	28.64	m^2				
Surface Loading Rate	**12**	$m^3/m^2/day$				
Thickening area required	9.36	m^2	freeboard	**1**	m	
Maximum area	28.64	m^2	slab thickness	**0.35**	m	
Area of distribution chamber	**20%**		offset to wall	**0.25**	m	
Total area required	34.36	m^2	wall thickness	**0.3**	m	
Diameter of circular tank	6.61	m	fix	**6.7**	m	
Thickening area available	35.26	m^2				
SWD	**2**	m				
Actual volume provided	70.51	m^3				
Thickened sludge consistency	**3%**	of total sludge volume				
Thickened sludge volume	34.36	m^3/day			area in m^2	**47.78**
Pump for Sludge transfer to Centrifuge						

Type of pump set	Screw pump					
Number of pumps	**1.00**	W	**1**	SB		
Volume of thickened sludge to be pumped	34.36	m^3/day				
Working hours of centrifuge	**5.00**	hours				
Discharge required	6.87	m^3/hour	1.9E-03	m^3/ sec		
Head required	**15.00**	m				
Efficiency	**50%**					
Power required	0.764	fix	**1.00**	HP		
Energy	2.848	kwh				
Sludge Centrifuge and Dosing Tanks						
Number of centrifuges	**1**	SB	**1**			
Capacity of centrifuge	**0.25**	m^3/hour				
Poly electrolyte dozing for centrifuge & thickener	**10%**					
Sludge volume	1145.43	kg/day				
Dose	**2**	kg/1000 kg				
Quantity of Poly Electrolyte	2.29	kg/day				
Concentration	**0.1**					
Volume of tanks @ 24 hour	2.29	m^3				
	2290.85	litres				
Volume	95.45	litres/hour				
Volume required for 8 hours	0.76	m^3				
Liquid depth of tank	**1**	m				
Area required	0.76	m^2				
side of square tank	0.87	m	fix	**1**	area in m^2	2

TABLE 4.11 SLUDGE TREATMENT UNITS

4.11 PRELIMINARY STRUCTURAL DESIGN OF COMPONENTS

For the various units of the STP, structural analysis and design have been performed in accordance with the stipulations of all relevant Indian Standard Codes of practice. For the reinforced concrete elements, special attention has been given to arrive at the preliminary dimensions to satisfy norms and conditions for the water retaining structures. For the metallic structures like pressure filter units, similar approach has been adopted. Since the units are constantly in contact with aggressive environment like sewage, non-corrosive coating for reinforcing steel and water proofing application for the inner side of reinforced concrete structures are recommended. These provisions are already given in the detailed estimates. During the execution stage, a detailed structural analysis of the components can be performed. However, the dimensions are expected to fall within the limits of the values obtained from the preliminary analysis. As per the soil investigation report of the test conducted in the nearby locality the soil is clayey at shallow depth followed by rockey strata. Hence in the case of foundations, bored cast-in-situ DMC piles are suggested for most of the water retaining structures. However, during the execution stage, detailed soil investigations can be performed.

The load carrying capacity of the bored cast-in-situ piles is roughly estimated based on the report of the soil test conducted in the nearby locality and is described as follows:

Sl No	Diameter of pile in cm	Load carrying capacity in Tonnage (Socket length 50 cm)
1	45	33
2	60	57
3	70	76
4	80	98

TABLE 4.12 LOAD CARRYING CAPACITY OF PILES CALCULATED BASED ON IS 2911

Cover for the reinforced concrete elements is to be given in accordance with the exposure conditions given in the IS 456 Code of practice. Even though, most of the components are

designed as reinforced concrete, innovative materials with high strength to weight ratio like Fibre Reinforce Polymers (FRPs) can also be tried after performing detailed structural analysis.

Manholes and pipelines are to be checked for external traffic loads pertaining to the characteristics of each road and soil conditions. Since the accurate data of this will be obtained during the execution stage of the project, the detailed structural analysis of the pipelines and manholes will be required to be performed later and the changes are to be incorporated accordingly.

4.12 DIMENSIONS OF COMPONENTS OF STP UNITS

The dimensions of different components obtained as per detailed analysis is briefly enlisted below

Dimensions of Components				
Sl No	**Item**	**Length**	**Breadth**	**Height incl. free board**
Septage Unit				
1	Septage receiving chamber	1	0.5	1.45
2	Dilution Tank	3.6	3.6	3.35
3	Oil & Grease Trap	1.6	0.75	1.55
4	Coarse screen channel	4	0.6	1.5
STP				
5	Collection Well	5 m dia		4.5
6	Coarse Screen channel	5.5	1.75	1.5
6	Receiving chamber	3.7	3.7	2.6
7	Oil &Grease trap	4.75	4	3.25
8	Grit Chamber	3.9	3.9	4.1
9	Parshall Flume Channel	6.5	0.5	1.5
10	Equalisation Tank	26	15	3.9
11	Primary Clarifier	11.5 m dia		3.9
12	MBBR I	16.9	16.9	4.1
13	MBBR II	17.4	17.4	4.1
14	MBBR III	13.3	13.3	4.1
15	MBBR IV	8	8	4.1
16	Alum Tank	1.55	1.55	1.5
17	Lime Tank	1.05	1.05	1.5

18	Secondary Clarifier	9.6-5.4	9.6-5.4	6.5
19	Sludge Sump	3.5 m dia		2
20	Sludge Thickener	6.7 m dia		3
21	Poly Electrolyte Tank	1	1	1.4
22	Chlorine Contact Chamber	7.6	7.6	2.5
23	Filter Feed Chamber	6.2	6.2	2.35
24	Pressure sand filter	2.5 m dia		3
25	Activated Carbon filter	2.75 m dia		3
26	Treated Water Tank	9.5	9.5	3

TABLE 4.13 DIMENSIONS OF STP COMPONENTS

CHAPTER 5

DETAILED ESTIMATES

5.1 GENERAL

The detailed estimate for the STP components is prepared in accordance with the Delhi Schedule of Rates (DSR) 2018 provisions after applying District Cost Index. For certain items, market rates are adopted. For simplicity and rapid work plan, the dimensions of the design of unit operations, chemical and biological process and structural dimensions of components are given as the input values for the data spread sheet of detailed estimate.

5.2 ABSTRACT OF ESTIMATE

ABSTRACT OF COST		
Sl. No.	**ITEM**	**AMOUNT**
A	**CIVIL WORKS**	
1	Site Preparation-LS	₹ 1,16,150
2	OG Trap, Receiving Chamber, Screen, Grit Chamber	₹ 43,22,342
3	Equalisation Tank & Primary Clarifier	₹ 1,35,02,769
4	Dilution Tank for Co-treatment	₹ 8,17,759
5	Moving Bed Biofilm Reactors	₹ 1,79,71,526
6	Clarifier with Tube/Plate Settler	₹ 28,38,776
7	Sludge Sump and Thickener	₹ 15,85,882
8	Chlorine Contact Tank and Filter Feed Tank Tank	₹ 23,78,228
9	Treated Water Tank	₹ 19,07,552
10	Green Belt and Landscaping	₹ 11,55,000
11	Facility for Recycling Purposes	₹ 5,00,000
12	Building with Trussed Roof and Eco-friendly walls	₹ 98,78,002
13	Equipment, Laboratory items, Furniture and Computer	₹ 15,00,000
14	Pile foundations for RCC structures	₹ 1,38,82,584
15	Sewer network with pipelines and chambers	₹ 1,30,46,69,576
	TOTAL	**₹ 1,37,70,26,146**
B	**MECHANICAL ITEMS**	**₹ 6,53,83,151**
C	**ELECTRICAL ITEMS**	**₹ 1,19,56,344**
D	**TOTAL PROJECT COST**	**₹ 1,45,43,65,641**
	GST @ 18%	**₹ 26,17,85,815**

	DPR preparation charge @ 2.5%	**₹ 3,63,59,141.02**
	Centage charges@10%	**₹ 14,54,36,564**
	Unforeseen	**₹ 2,839**
E	**GRAND TOTAL**	**₹ 1,89,79,50,000**
F	**Total O&M cost for 10 years**	**₹ 72,32,53,000**
G	**TOTAL COST including 10 years O&M**	**₹ 2,62,12,03,000**
	(Rupees Two hundred and Sixty Two Crores Twelve Lakhs Three Thousand Only)	

TABLE 5.1 ABSTRACT OF ESTIMATE

5.3 DETAILED ESTIMATE OF COMPONENT

The detailed estimates have been divided into four sections: a] civil construction b] mechanical works c] electrical and instrumentation works d] operation and maintenance. The detailed estimate of different components are shown as annexure.

CHAPTER 6

OPERATION AND MAINTENANCE

6.1 GENERAL

For the success of a sewerage treatment system, it is inherent to note that meticulous operation and maintenance planning is the key. In the following sections various aspects of effective operation and maintenance, cost analysis, application of modern technologies for monitoring and process control and maintenance of an eco-friendly system are illustrated.

In engineering parlance, the term operation refers to the daily operation of the components of a sewerage system such as collection system, sewage pumping stations (SPS), pumping mains, sewage treatment plants (STP), machinery and equipment, etc., in an effective manner by various technical personnel, and is a routine function. The term maintenance refers to the art of keeping the structures, plants, machinery and equipment and other facilities in optimum working order and includes preventive maintenance or corrective maintenance of mechanical adjustments, repairs, and planned maintenance. However, replacements, correction of defects etc., are considered as actions excluded from preventive maintenance.

6.2 PLANNING FOR EFFECTIVE OPERATION AND MAINTENANCE

Three categories of variability that can affect the design, performance and reliability of a wastewater treatment plant are a) variability of the influent wastewater flow rate and characteristics, b) inherent variability in wastewater treatment processes and c) variability caused by mechanical breakdown, design deficiencies and operational failures.

It may be noted that effective use of the equalisation facility will balance most of the issues related with the variability of the influent flow rate and abnormal BOD levels at certain points of time. Many of the treatment units exhibit variability in performance despite the efficient planning and design. However, these problems can be eliminated at the design stage itself by adopting some conservative values. At the operational stage, some of the design deficiencies can be addressed by few additions in the system which will not affect the total operational cost. Occurrence of mechanical and electrical breakdown can be addressed by careful planning of

maintenance activities. There is a provision for diesel generator back up and solar energy sources also can be relied upon.

It is recommended to form an internal monitoring committee for periodical inspection and control of activities related to the function, efficiency and operation of the STP. Help from Kudumbasree for support activities of monitoring and control can be sought.

Operation and maintenance for 10 years is to be performed by the firm who carries out the construction and commissioning of the STP.

6.3 TYPE OF MAINTENANCE

There are three types of maintenance of a sewerage system – preventive, routine and emergency. Preventive or routine maintenance should be carried out to prevent any breakdown of the system and to avoid emergency operations to deal with clogged sewer lines or overflowing manholes or backing up of sewage into a house or structural failure of the system. Preventive maintenance is more economical and provides for reliability in operations of the sewer facilities. Emergency repairs, which would be very rare if proper maintenance is carried out well, also, must be provided for. Proper inspection and preventive maintenance are necessary.

6.4 INSPECTION AND EXAMINATION OF SEWER

Sewer collection systems are intended to be a reliable method of conveying sewage from individual discharge to sewage treatment plants. Inspection and examination are the techniques used to gather information to develop operation and maintenance programmes to ensure that new and existing collection systems serve their intended purposes on a continuing basis. Inspection and testing are necessary to do the following:

• Identify existing or potential problem areas in the collection system,

• Evaluate the seriousness of detected problems,

• Locate the position of problems, and

• Provide clear, concise, and meaningful reports to supervisors regarding problems.

Two major purposes of inspection and examination are to prevent leaks from developing in the sewers and to identify existing leaks so they can be corrected. Due to age,

deterioration of the material of the sewer by attack of hydrogen sulphide or other chemicals, settlement of foundations and leaking joints may result in the structural failure of the sewer. It takes a very long time from the onset of the first initial defect to the collapse of the sewer. A crack or a leaking joint will allow subsoil water and soil mixture to enter the sewer causing cavities around it leading to slow settlement of foundation and the eventual collapse of the sewer.

Very often soil with water is carried away below the bedding along the length of the sewer. The type of failures often gives a clue to the cause. A shear failure due to faulty foundation or movement of earth is a clean vertical break in the pipe or barrel. Excessive loading, either internally or externally, causes horizontal breaks. Breaks caused by internal pressure leads to cracks in the sewer while external overload causes the top of the pipe to be crushed. Regular inspection of the sewer can pinpoint the sewer that needs to be attended to before there is a complete failure or collapse. For preventing the above serious instances of damages to the sewer system, the maintenance engineer should establish adequate inspection and examination programmes.

6.5 SEWER CLEANING

To operate and maintain a sewer collection system to function as intended, the maintenance engineer should try to strive towards the following objectives:

• Minimize the number of blockages per unit length of sewer, and

• Minimize the number of odour complaints. For this purpose, sewer-cleaning using hydraulic or mechanical cleaning methods needs to be done on a scheduled basis to remove accumulated debris in the pipe such as sand, silt, grease, roots and rocks. If debris is allowed to accumulate, it reduces the capacity of the pipe and blockage can eventually occur resulting in overflows from the system onto streets, yards and into surface waters. Roots and corrosion also can cause physical damage to sewers.

6.6 PROTECTION OF SEWER SYSTEMS

A sewer may get damaged if other facilities such as water pipe or electric cable work are done beside or at the cross-section of a sewer. Especially, fluctuations due to ground excavation (pile, underground water drops and pile method) may have a serious impact. To avoid damages of sewer, the maintenance engineer should do the following:

1. Collect all related information about the construction activities which are planned around the sewer location,

2. Advise appropriate construction methods to minimize impact for sewer, and

3. If necessary, request the concerned agencies to adopt the protective measures for sewer prior to the work commencement.

6.7 INSPECTION OF MANHOLES AND APPURTENANCES

Because they are part of the collection system, manholes require the same inspection and attention as the rest of sewer network. When located in streets, these structures are subject to vibrations and pounding by vehicle traffic. Manholes may settle at a different rate than connected sewer, creating cracks in sewer pipe joints. The objectives of manhole inspection are therefore, to determine the proper elevations or grades around the lid, to confirm that the lid is not buried, and to examine structural integrity (look for cracks) of the manhole and its functional capacity. The condition of the pipelines coming into a manhole may be known merely by observing the content and volume of flows from a specific direction.

Manhole inspection and examination are made by visually inspecting the condition of the cover and the internal parts. Manhole inspection should be carried out together with the inspection and examination of sewer. It is generally carried out together with the cleaning of the sewer. Before entering any manhole, adequate safety measures should be taken in accordance with stipulations. Safety measures during the work should be formulated considering traffic safety, oxygen deficiency, poisoning due to toxic gas such as hydrogen sulphide and so on.

6.8 CLEANING OF MANHOLES

Manhole cleaning should be performed by the most appropriate work method that suits the actual conditions of the work location. In manholes at starting point, junction manholes and manholes at sharp curve of sewers, sand and silt get deposited and environmental problems such as foul odours occur. For this reason, periodic cleaning is necessary. Moreover, when large debris flows in, it should be removed immediately otherwise there is a possibility of an overflow accident, float-off and dispersion of cover. Manhole inspection should be generally carried out together with the cleaning of the sewer. The work on the silt and sand in the bottom part should be pursuant to cleaning of the sewer pipe, while the dirt on the sidewall should be cleaned by high-pressure jet washing vehicle.

6.9 SAFTEY PRACTICES

Sewer cleaning is an occupation that has an overall accident frequency rate that is relatively higher than any other industry. The employer has the responsibility of providing the worker with a safe place to work. Nevertheless, the worker has the overall responsibility and must ensure that it is a safe place to work. This can only be done by constantly thinking of safety and working safely. The worker has the responsibility of protecting not only himself, but also all other plant personnel or visitors by establishing safety procedures for the plant and then ensuring they are followed. He must train himself to analyse jobs, work areas and procedures from a safety standpoint and learn to recognize potentiality hazardous actions or conditions. When he recognizes a hazard, he must take immediate steps to eliminate it through corrective action. If correction is not possible, guard against the hazard by proper use of warning signs and devices / by establishing and maintaining safety procedures. As an individual, the supervisor can be held liable for injuries or property damage, which results from an accident caused by his negligence.

6.10 OPERATION AND MAINTENANCE OF LIFTING STATIONS

In general, lift stations are invariably used in gravity sewer network where depth of cut of sewers poses a problem in high water prone areas. The procedure is to sink a wet well on the road shoulder or an acquired plot after the shoulder and divert the deeper sewer there. The submersible pump will lift the sewage and discharge it to the next online shallow sewer. This is a very useful practice in such locations. Equipment located in the wet well should be minimized, including suction and discharge valves, check valves, or other equipment that require routine, periodic maintenance.

6.11 OPERATION AND MAINTENANCE OF PUMPING STATIONS

Pumping machinery is subjected to wear & tear, erosion and corrosion due to its nature of functioning, and therefore it is vulnerable to failures. Generally, failures or interruptions are mostly attributed to pumping machinery rather than any other component. Therefore, correct operation and timely maintenance and upkeep of pumping stations and pumping machinery are of vital importance. Sudden failures can be avoided by timely inspection, follow up actions on observations of inspection and planned periodical maintenance. Downtime can be reduced by maintaining inventory of fast moving spare parts.

Obviously due attention needs to be paid to all such aspects for efficient and reliable functioning of pumping machinery.

6.11.1 OPERATION OF PUMPS

The following points should be observed while operating the pumps.

A. Dry running of the pumps should be avoided.

B. Centrifugal pumps if installed with negative suction should be primed before starting.

C. Pumps should be operated only within the recommended range of the head-discharge characteristics of the pump.

• If pump is operated at a point away from duty point, the pump efficiency normally reduces.

• Operation near the shut-off point should be avoided, as it causes substantial recirculation within the pump, resulting in overheating of sewage in the casing and consequently, overheating of the pump.

D. As far as possible positive suction is to be provided to avoid priming during design itself.

E. Voltage during operation of the pump-motor set should be within ±10 % of the rated voltage. Similarly, current should be below the rated current shown on the name plate of the motor.

F. When parallel pumps are to be operated, the pumps should be started and stopped with a time lag between two pumps to restrict change of flow velocity to minimum and to restrict the dip in voltage in the incoming feeder and should be adequate to allow the pump head to stabilise.

G. When the pumps are to be operated in series, they should be started and stopped sequentially, but with minimum time lag. Any pump next in sequence should be started immediately after the delivery valve of the previous pump is even partly opened. Due care should be taken to keep open the air vent of the pump next in sequence, before starting that pump.

H. The stuffing box should allow a drip of leakage to ensure that no air passes into the pump and that the packing gets adequate wetness for cooling and lubrication. When the stuffing box is sealed with grease, adequate refill of the grease should be maintained.

I. The running of duty pumps and standby pumps should be scheduled so that no pump remains idle for a long period and all pumps are in ready-to-run condition. Similarly, the running

schedules should be ensured so that all pumps do not wear equally needing simultaneous overhaul.

J. If any undue vibration or noise is noticed, the pump should be stopped immediately and the cause for vibration or noise should be checked and rectified.

K. Generally, the number of starts per hour shall not exceed four. Frequent starting and stopping should be avoided as each start causes overloading of motor, starter, contactor and contacts. Although overloading lasts only for a few seconds, it reduces the life of the equipment.

6.12 SMART MANAGEMENT AND ONLINE MONITORING USING INTERNET OF THINGS (IoT)

Advancement in the field of digital technology has enabled the wastewater treatment system operators and managers to control and enhance the performance of various components of the system. Internet of things (IoT) consists of a network of physical objects using various sensors as end points to enable monitoring from a remote station.

For the sewerage treatment plant, a network of various sensors can capture the variations of values of parameters like temperature, dissolved oxygen, chemical composition, TDS etc. at different control points of the system. The continuous data obtained through IoT is used by a customised algorithm for synthesis to impart a decision-making procedure. A centralised information processing system (CIPS) can be formed for this task. In addition to this smart water flow meters can also be coupled to this digital environment. IoT in wastewater management can also be used to calculate residual chemicals after the treatment. This data can be further used to calculate the efficiency of the treatment process and ensure that water quality standards are met before it is discharged in a water body.

By using real-time data gathered through different embedded sensors, performance characteristics of machines can be monitored that further increase the productivity of equipment and boost maintenance tasks. In the present study for the municipality, provision for implementing an IoT based control of the units have been suggested.

6.13 ODOUR CONTROL METHODS

Odours are a complex combination of a wide variety of compounds; however, there are certain compounds and groups of compounds that contribute specifically to sewage odours, and significantly determine the selection of the control technology. These include the following:

• Hydrogen sulphide, and

• Ammonia.

Odour control is a complex and time-consuming challenge, often requiring a combination of methods for treating odorous gases and for removing or reducing the potential causes of the odours. If an odour problem is severe enough to affect the community, an emergency response and solution to the problem must be carried out quickly. The approach for selecting an odour control method or technology includes the following steps:

A. Identify the odour source and characteristics through sampling and analysis.

B. List and assign priorities to controlling a specific odour problem, recognizing considerations such as cost, plant location, future upgrading of various sewage processes, severity of the odour problem, and the nature of the affected area.

C. Select one or more odour control method or technology for implementation to meet the objectives of steps “a” and “b”, taking into consideration the advantages and disadvantages of each.

D. Monitor odour emissions from the treated air for process adjustments and for feedback to evaluate the solution’s effectiveness.

Hydrogen sulphide (H2 S) is the most common odorous gas found in sewage collection and treatment systems and results from the reduction of sulphate by bacteria under anaerobic conditions. Its characteristic rotten-egg odour is well known. The gas is corrosive, toxic and soluble in sewage. Hydrogen sulphide is considered a broad-spectrum poison, meaning it can poison several different systems in the body.

6.13.1 PREVENTION OF ODOUR

Hydrogen sulphide production can be controlled by maintaining conditions that prevent the build-up of sulphides in the sewage. The presence of oxygen at concentrations of more than 1.0 mg/L in the sewage prevents sulphide build-up because sulphide produced by anaerobic bacteria is aerobically oxidized. Maintaining an aerobic environment inhibits the anaerobic degradation process, which contributes to the generation of hydrogen sulphide. A checklist is given below:

• Prevent corrosion in the collection well of the facility by blowing air through the facility

• Avoid storing screenings and grit generated in the grit chamber for a long time. Dispose of screenings and grit at appropriate intervals

• Retention time of sludge in the sludge treatment facilities should be appropriate (Do not retain sludge for a long time)

• Maintain sewage at neutral pH range because most of the sulphide is present at a pH value of less than 7.

Following is a short checklist of operational considerations for controlling odours of primary treatment facilities: (May also apply in other facilities)

• Remove scum routinely, with increased frequency during warm weather.

• Remove sludge before it can bubble or float.

• Wash weirs and other points where floatable and slime collect. Some facilities use submerged pipes with holes rather than effluent troughs. The submerged pipes do not splash the primary effluent, thereby reducing the release of hydrogen sulphide.

• Wash down all spills and grease coatings.

• When draining a tank, immediately flush it completely. If sludge does not drain quickly, spray lime, calcium hypochlorite, or potassium permanganate on the sludge surface to reduce odours. Because even a clean tank can produce odours, flushing the tank with a chlorine solution or keeping the tank floor covered with a low concentration of chlorine solution will reduce odours.

• If the sewage is septic, add chemicals in the collection system or at the plant, as appropriate, to reduce sulphides.

• If tanks are covered for odour control, keep plates and access hatches in place.

• Routinely check any odour scrubbers or deodorizers for plugging, adequate supply of chemicals, proper pressures for demisting, and/or effectiveness of carbon.

• The splashing of primary sewage into weir troughs and effluent channels can result in the release of hydrogen sulphide. If possible, try to minimize the splashing of primary sewage into the channel or weirs. If it cannot be accomplished operationally, then installing submerged sewer pipes may be necessary. This will require tank modifications to verify the plant hydraulics and provide proper control to avoid fluctuations in the tank levels.

• Minimize the stripping of hydrogen sulphide from the sewage when using channel air diffuser systems. Adoption of the following regular practices will not only increase removal efficiency but will provide better working conditions for the operator:

• Regularly remove accumulations from the inlet baffles and outlet weirs with a hose or a broom with stiff bristles. Only experience will determine the necessary frequency.

• Clean scum removal equipment regularly; otherwise, obnoxious odours and an unsightly appearance will result.

• Keep cover plates in place except when operations or maintenance require their removal.

• Immediately flush and remove all sewage and sludge spills. Avoid hosing down motors and enclosed control devices.

• Establish a housekeeping schedule for the primary treatment area, including galleries, stairwells, control rooms, and related buildings, and assign responsibility for each item to a specific employee.

• Repaint surfaces as necessary for surface protection and appearance.

6.13.2 CONTROL OF ODOUR BY CHEMICAL ADDITION

Chemical addition can control odours in STP by preventing anaerobic conditions or controlling the release of odorous substances.

Chemical	Effective against
Oxidizers	
Ozone	Atmospheric hydrogen sulphide only
Hydrogen peroxide	Hydrogen sulphide, also acts as oxygen source
Chlorine	Hydrogen sulphide and other reduced sulphur compounds
Sodium and calcium hypochlorite	Hydrogen sulphide and other reduced sulphur compounds
Potassium permanganate	Hydrogen sulphide and other reduced sulphur compounds

TABLE 6.1 CONTROL OF ODOUR BY CHEMICAL ADDITION

6.14 MAINTAINING AN ECO-FRIENDLY SYSTEM

In the proposed system of sewerage treatment, care has been taken to treat the sewage and sullage effectively and efficiently to protect the environment. Hence the natural water sources are also benefitted, and a portion of the recycled water can be used for toilet flushing, gardening etc. Since the treated water contains plant nutrients also, it will be beneficial for the environment when discharged as soil infiltration. Care has also been taken to properly treat the sludge produced during the operation.

It has also been decided to impart a green environment to the STP units with special methods of growing plants at the exterior of plant components and space between units. Maximum utilisation of space has been taken at the planning and design stage itself and using the natural treatment properties of the soil, such decentralized systems provide good opportunities to use the natural environment. They can help reduce the level of difficulty and cost to treat pollutants, such as nutrients, and keeping them from entering lakes, rivers, and streams.

Some aspects of the green landscaping eco-friendly unit management are described below for the proposed STP:

Soil: The soil acts as a natural filter and provides final treatment by removing harmful bacteria, viruses, and nutrients.

Odour management: Special attention is also given to proper odour management by using green belt inspired landscaping and chemical application whenever needed at extreme cases.

Trees: barrier formed with fast growing trees are planned for protection against pollution, for defining boundaries and for assisting in the creation of beautiful landscaping. Some of the plants are Casuarina Equisetifolia, golden bamboo, Grevillea Robusta etc.

Shrubs: the use of shrubs in the mass as a basic constituent in the planning of landscape is important. Shrubs with properties of hardiness, vigorous growth and an emphasis on evergreen plants are selected.

Creeping plants for exterior of units: plants like climbing hydrangea attaches itself to walls and grow to impart a green environment.

Air purifying plants: Polluted air contains particles, odours and harmful gases like nitrogen oxides, sulphur dioxide and ammonia. These pollutants settle on the leaves of trees and plants. The leaves and plant surface absorb these pollutants and through their stomata (pores) and filter these harmful substances from the air. Trees also trap heat and reduce greenhouse gases in the

atmosphere. They also reduce the ground level ozone level and enrich the air around us with life giving oxygen. For combating a variety of respiratory troubles and other illnesses caused by air pollution, there can be no better way than planting some chosen varieties of plants that can cleanse the air and make our environment better.

The bamboo palm is a popular purifying houseplant due to its tropical look and insect-repelling quality. The bamboo palm can remove substances like benzene, formaldehyde, chloroform, carbon monoxide, and xylene.

6.15 OCCUPATIONAL HEALTH HAZARDS AND SAFTEY MEASURES

The sanitation workers, engaged in operation and maintenance (O&M) of sewerage system or septic tanks, are exposed to different types of occupational hazards like injuries caused by physical actions, chemicals contacts, infections caused by pathogenic organisms, and dangers inherent with oxygen deficiency, hydrogen sulphide, and combustible gases. The employers are obligated to provide their employees with safety equipment or protective gears as well as cleaning devices and ensure observance of safety precautions appropriate for each hazardous condition to reduce the employees' risks to health and safety. Moreover, to guard against human error and carelessness, proper safety training and adequate effective supervision by safety personnel are most essential.

The GOI enacted the "Employment of Manual Scavengers and Construction of Dry Latrines (Prohibition) Act, 1993," which declared the employment of scavengers or the construction of dry latrines to be an offence, considering the foregoing, another bill titled "The Prohibition of Employment as Manual Scavengers and their Rehabilitation Bill, 2013" was introduced in the Parliament in September 2013 and has since been passed. The Bill aims to eliminate manual scavenging and insanitary latrines and provides for proper rehabilitation of manual scavengers in alternative occupations so that they can lead a life of dignity. In addition to the Acts mentioned above, employees shall follow "Contract Labour Regulation and Abolition Act, 1970" for secure operational health and safety at their sites. O&M of sewerage facilities, which should not be discontinued at any moment, requires health and safety consciousness equal to or greater than one that is needed for construction projects. In India, "health and safety policy" is defined in construction project management by Bureau of Indian Standard (BIS). Therefore, the same health and safety policy for construction projects may also be adopted for O&M of sewerage facilities. STPs are subject to safety audits, which confirm the status of safety and health organizational setup, education / training, provision / inspection of personal protection, and

records of safety, to ensure occupational safety and health at the work sites. The plant engineer should rectify failures immediately, if any. The audit shall be implemented as per IS: 14489 "Code of Practice on Occupational Safety and Health Audit." Standard safety audit procedures of the inspectorate of factories shall be at a frequency of a month and compliance reported to that agency.

6.16 COST ANALYSIS

OPERATION & MAINTENANCE COSTS					
Sl. No.	**Item**	**Rate**	**Nos.**	**Unit**	**Expenditure**
1	**Power Charges for STP @ Rs. 7.2 for kwh @**	**242578.4**		**kwh/month**	**17,46,565**
2	**Power Charges for network @ Rs. 7.2 for kwh @**	**75868.2**		**kwh/month**	**5,46,251**
3	**Operators rate/month-STP**	**25000.0**	**3**	**Nos.**	**75,000**
4	**Operators rate/month-Wells**	**15000.0**	**3**	**Nos.**	**45,000**
5	**Fitter rate/month-STP**	**20000.0**	**1**	**Nos.**	**20,000**
6	**Driver for septage handling vehicle/month**	**20000.0**	**2**	**Nos.**	**40,000**
7	**Cleaner for septage handling vehicle/month**	**15000.0**	**2**	**Nos.**	**30,000**
8	**Fuel for generator/month**				**20,000**
	Fuel for vehicle/month@150 km/day for both vehicles	**1425**			**42,750**
9	**Cost of chemicals per month**				**36,000**
13	**Spares and replacements/month**				**8,000**

14	**Network routine inspection, flushing, cleaning including for manholes/month@**	**1% of cost of network/year**			**10,87,225**
	Total per month				**36,96,790**
	Total per month excluding power charges				**14,03,975**
	Annual Operation & Maintenance Charge				**4,43,61,484**
	Annual Operation & Maintenance Charge excluding power charges				**1,68,47,696**
	Treatment Cost per Day				**1,21,538**
	Unit Cost of Treatment per Kilo Litre				**23**
10 YEAR ANNUAL O&M COST CONSIDERING 7% ANNUAL INCREASE EVERY YEAR					
Including power charges					
1	**1st year**				**₹ 4,43,61,484**
2	**2nd year**				**₹ 4,74,66,788**
3	**3rd year**				**₹ 5,07,89,463**
4	**4th year**				**₹ 5,43,44,725**
5	**5th year**				**₹ 5,81,48,856**
6	**6th year**				**₹ 6,22,19,276**
7	**7th year**				**₹ 6,65,74,626**
8	**8th year**				**₹ 7,12,34,849**
9	**9th year**				**₹ 7,62,21,289**
10	**10th year**				**₹ 8,15,56,779**

	Total O&M cost for 10 years				**₹ 61,29,18,136**
	GST @ 18%				**₹ 11,03,25,264**
	Unforeseen charges				**₹ 9,600**
	Total O&M cost for 10 years including GST				**₹ 72,32,53,000**
	(Rupees Seventy Two Crores Thirty Two Lakhs and Fifty Three Thousand Only)				

TABLE 6.2 OPERATION & MAINTENANCE COSTS

CHAPTER 7

CONCLUSIONS

7.1 OBSERVATIONS FROM ANALYSIS

From the analysis performed for the Pattambi Municipality, Palakkad with respect to the planning designing and implementation of a sewerage system, it can be observed that both the Local Body and the society mutually benefits substantially once the project is realised. Adopting a meticulous operation and maintenance plan, the system can be successfully run for a longer period without experiencing any troubles. Since there are many innovative digital technologies for controlling the performance of the system, it is an easy task for the institution to own and run the sewerage system. This will also pave the way for a wider acceptance in the society for decentralised sewerage system applications. Adopting non-conventional energy sources like solar energy, it will be an easy affair to run many of the low-capacity pump sets. Also, a building envelope with eco-friendly materials and construction technologies will give an aesthetically pleasing and healthy system.

7.2 INSTITUTIONAL ARRANGEMENTS

Kerala Water Authority (KWA) has set up four sewerage circles under the sewerage vertical concept recently. The idea and vision behind it are to visualize and materialize complete sewerage schemes for the State. The Sewerage Circle, Thrissur has been assigned the task of preparation of Detailed Engineering Report (DER) for the Districts of Thrissur, Palakkad and Malappuram. The Project Planning and Development wing (PPD), Kochi has been given the additional charge of Sewerage Circle, Thrissur at present.

It is imperative that the institutional structures for the delivery of sewerage services are streamlined. The urban sanitation sector can learn from counterpart rural area programming such as Total Sanitation Campaign (TSC), National Rural Health Mission (NRHM), Sarva Shiksha Abhiyan (SSA), Integrated Child Development Services (ICDS) in establishing such institutional structures with clearly laid out roles and responsibilities. Until Local Self Government Institutions LSGI's develop their robust capacities, it is desired that the technical support is extended in planning, designing, implementation and O&M of sanitation services by other departments. Active involvement of local NGOs, community organizations, self-help groups of women will be ensured through awareness creation and community mobilization for increased ownership of the overall sanitation agenda at the local level. Promotion of active

support to specially formed groups at the Ward level with primary focus in eliciting women participation will be paramount to the achievement of the goals of the State Sanitation Strategy.

7.2.1 DISRTICT LEVEL APPROACH

At each district level, water and sanitation mission headed by the District Collector is constituted and all officials pertaining to the sewerage planning and implementation process can contribute to the achievement of complete coverage for the district. District level monitoring committee can also be formed with involvement of representatives of beneficiaries and local bodies. District level offices of KWA can closely associate with the district level sewerage activities of district administration.

7.2.2 URBAN LOCAL BODY (ULB) LEVEL APPROACH

A multi stakeholder comprising of representatives from shops and establishments, sanitary workers unions, educational institutions, women groups, contractors, NGO's, line departments, political and eminent personalities to be led by the Mayor/Chairman/Chairperson along with the Executive head of the ULB shall be constituted. The City Sanitation task force shall be duly supported by a City Sanitation Cell (CSC) that is staffed with relevant human resources. The cell shall be responsible for preparation and implementation of the city sanitation plan.

7.3 DATA INFORMATION AND MANAGEMENT

Accurate and reliable data information and management is a prerequisite for successful operation and maintenance of sewerage systems. As far as KWA is concerned, every district can have a district office with effective subunits for multi-pronged activities in data analysis and decision making. Modern technologies can be utilised for upgrading the existing systems and informed decision-making process can be sorted out for maintaining desirable level of performance of sewerage schemes.

Similarly, it may be noted that LSG officials are to be trained to make latest state of art maps of adequate resolution (1:10,000 and better) and uses WGS84 (World Global System 1984) as the datum for all their spatial information. Such an information system shall make best use of the GIS and MIS platforms that are rapid to access and retrievable for use in planning for urban and rural infrastructure, creates compatible data formats and transforms MIS information (e.g. for property mapping, census etc.) into spatial geo-referenced GIS files for further analysis and interpretation for all the important sectors (e.g. water, waste water, solid waste, storm

water).Since ULBs and other LSG's have the final responsibility for ensuring all service delivery of sanitary and environmental outcomes, it is necessary that the state is refining and complementing existing national standards wherever adaption to the regional settings is required if and when required.

7.4 ENVIRONMENTAL IMPACT MANAGEMENT

During the construction phase, the emissions from movement of vehicles used for project activity may affect the air quality due to the particulate matter generated during loading, transporting, unloading of materials during construction. Movement of heavy vehicles and concrete mixer would generate considerable noise in the surrounding environment. Hence a proper traffic management plan is recommended during the construction activities.

Sludge generated in the STP must be properly disposed off by transforming it into fertilizer products or bricks for low impact construction activities. Recycled water generated from the STP is to be used as per the guidelines already given.

Regarding the positive impacts, it is to be noted that water quality of the rivers and streams will be greatly improved along with the general environment. The large quantity of recycled water will be useful for multiple purposes including agriculture.

7.5 GENDER EQUALITY AND SOCIAL IMPLICATIONS

The project is envisaged to provide substantial improvements in the life of the people belong to the project area, especially for the womanhood. During the operation of the STP and the sewer network, the ULB can form a special monitoring group comprising of dedicated workforce especially from "Kudumbasree" units or similar groups for continuous appraisal of the sewerage scheme and subsequent up gradations. There must be special programmes organised for capacity building of the beneficiaries and all workforce associated with the operation and maintenance of the sewerage project.

It may be noted that overall costs (capital and operating) and financial sustainability must be determined to arrive at the most optimum solution. Hence during the detailed engineering survey and investigations stage these factors are to be considered for better performance of the system.

Fig.7.1 CAPITAL COST PLANNING

Fig 7.2 OPERATING COST PLANNING

The Disability-Adjusted-Life-Years (DALY) is a measure of overall disease burden, expressed as the number of years lost due to ill-health, disability or early death. Originally developed by the WHO, it is becoming increasingly common in the field of public health and health impact assessment (HIA). It extends the concept of potential years of life lost due to premature death – to include equivalent years of 'healthy' life lost by virtue of being in states of poor health or disability. In doing so, mortality and morbidity are combined into a single common-matrix.

As per the WHO report, 80% of the diseases in human being are water-borne and water-related. It is mainly due to water pollution or water contamination and water logging. Though water logging may be location and weather specific, but water pollution and contamination is a common phenomenon which can occur at any place at any point of time if community is not careful about adverse impact of indiscriminate disposal of sewage. The indiscriminate disposal of human excreta or sewage from habitations may contain hazardous

micro-organisms (pathogens) for water pollution and harbouring vectors which act as carriers of pathogens. Improvements in water supply and sanitation including management of municipal solid waste can substantially reduce the incidences and severity of these diseases, as well as infant mortality associated with diarrhoea.

From the above statements, it is evident that environmental pollution by liquid and solid wastes adversely affects the environment and human health directly or indirectly resulting in loss of life and heavy financial burden on exchequers.

7.6 ACTION PLAN FOR IMPLEMENTATION

The following sequence of implementation plan for the institution may be more effective in realising the goals of providing the sewerage system.

Priority	Plan
I	Preparation of a detailed engineering report
II	Appraisal of the report
III	Sanction of the project
IV	Fund mobilisation
V	Invitation of Tender for work
VI	Execution of work
VII	Formation of monitoring committee
VIII	Regular maintenance
IX	Assessment of performance
X	Modifications in process/unit operations

TABLE 7.1 ACTION PLAN FOR IMPLEMENTATION

7.7 RECOMMENDATIONS

The success of the system largely depends upon the commitment and attitude of the people benefitted from it and hence it is inherent that the Local Body will investigate every detail of the sewerage treatment plant and its supporting units to render a model of its kind in the State. Some of the points of action to be taken to enhance the performance of the system are outlined as follows:

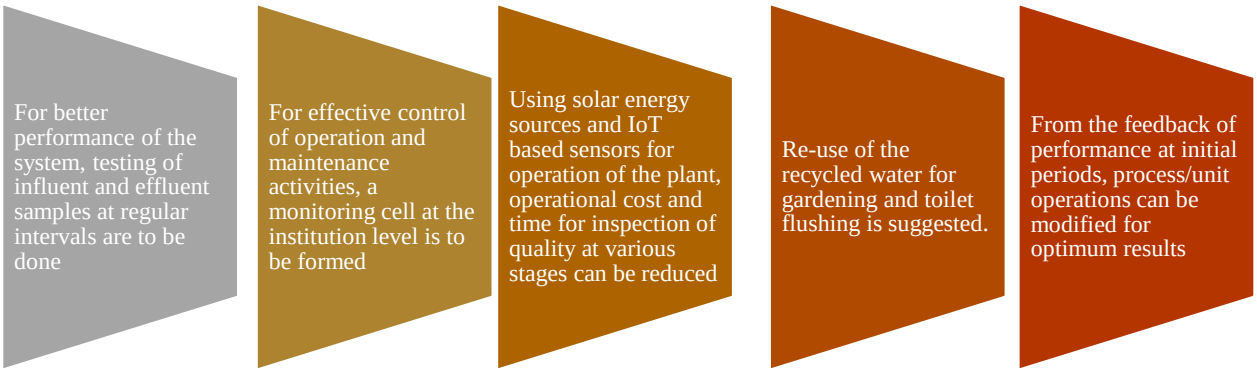

Fig 7.3 SUGGESTIONS AND RECOMMENDATIONS

REFERENCES

1. Wastewater Engineering, Treatment and Reuse, Metcalf & eddy, Inc.
2. The moving bed biofilm reactor, H. Odegaard, Faculty of Civil and Environmental Engineering, Norwegian University of Science and Technology, Trondheim, Norway
3. Biological Wastewater Treatment Process Design Calculations Harlan, H. Bengtson, PE, PhD, Emeritus Professor of Civil Engineering Southern Illinois University Edwardsville
4. Moving Bed Biofilm Reactor Technology: Process Applications, Design, and Performance James P. McQuarrie, Joshua P. Boltz
5. Design of MBBR Based Sewage Treatment Plant for an Educational Campus Ruksana T P, Priyanka T, Haneesh K R
6. Manual on Sewerage and Sewage Treatment Systems, Ministry of Urban Development, New Delhi, CPHEEO Part A, Part B and Part C
7. Indian Standard Code of Practice for Installation of Septic Tanks, Part I Design Criteria and Construction, IS 2470 (Part-1)-1985
8. Indian Standard Code of Practice for Installation of Septic Tanks, Part 2 Secondary Treatment and Disposal of Septic Tank Effluent, IS 2470 (Part-2)-1985
9. Indian Standard Plain and Reinforced Concrete - Code of Practice, IS 456:2000
10. Indian Standard Concrete Structures for Storage of Liquids - Code of Practice Part 1 General Requirements, IS 3370 (Part-1 to 4)
11. Indian Standard Code of Practice for High Density Polyethylene pipes for sewerage, with all amendments, IS 14333 -1996
12. IS 4111,Indian Standard Code of practice for manholes
13. Guide to septage treatment and disposal by EPA
14. Draft action plan for the rejuvenation of polluted river stretches submitted by the district level technical committee (Palakkad District)

ANNEXURES

NETWORK DETAILS IN ZONE 1					
PIPE NO	Start Node	End node	Length	Diameter	Average depth
2	n1136	n1135	29.98	180	1.42
3	n1135	n1134	29.98	180	1.56
4	n1134	n1133	30	180	1.71
5	n1133	n1132	29.94	180	1.815
6	n1132	n1131	29.91	180	2.06
7	n1131	n1130	29.32	180	2.78
10	n1129	n1128	29.97	180	1.745
11	n1128	n1127	29.99	180	2.71
20	n992	n993	30.21	180	1.36
21	n993	n994	29.99	180	1.71
22	n994	n995	29.98	180	2.12
23	n995	n996	29.95	180	2.735
24	n996	n997	29.98	180	3.765
25	n997	n998	30	180	4.745
26	n998	n999	29.99	180	5.255
27	n999	n1127	29.94	180	4.275
30	n3074	n1139	39.26	180	1.475
31	n3075	n1142	15.99	180	1.255
32	n1142	n1143	20.84	180	1.47
33	n1144	n1143	28.65	180	1.365
34	n1143	n1145	29.92	180	1.64
35	n1145	n1139	20.18	180	1.75
36	n1139	n1140	29.88	180	2.23
39	n1004	n1005	30	300	2.34
40	n1005	n1006	29.99	300	3.245
41	n1006	n1007	30	300	3.365
42	n1140	n1005	30.54	180	2.92
43	n1146	n1147	29.98	180	1.38
44	n1147	n1009	34.68	180	2.555
45	n1007	n1009	42.91	300	3.46

46	n1009	n1010	29.95	300	3.525
47	n1010	n1011	29.92	300	3.505
48	n1011	n1012	29.98	300	3.45
49	n1012	n1013	29.91	300	3.565
50	n1013	n1014	29.98	300	3.785
51	n1014	n1015	30	300	4.13
52	n1015	n1016	29.95	300	4.675
53	n1016	n1017	29.98	300	5.34
54	n1017	n1018	30	300	5.855
56	n1019	n1020	29.92	400	1.15
57	n1021	n1022	29.99	400	1.425
58	n1022	n1023	29.79	400	1.54
59	n1023	n1024	29.91	400	1.43
60	n1024	n1025	30	400	1.61
61	n1025	n1026	30	400	1.895
62	n1026	n1027	29.44	400	2.195
63	n1027	n1028	30.55	400	2.41
64	n1028	n1029	30	400	2.55
65	n1029	n1030	29.98	400	2.795
66	n1030	n1031	29.91	400	3.17
67	n1031	n1032	29.83	400	3.62
69	n1033	n1034	24.9	400	1.465
71	n1034	n1036	15.54	400	1.96
72	n1036	n1037	30	400	2.325
73	n1037	n3248	30	400	2.415
74	n3248	n1038	30	400	2.205
75	n1038	n1039	30	400	2.015
76	n3078	n3010	20.28	250	5.255
77	n3010	n3009	29.9	250	4.065
78	n3009	n1040	29.92	250	2.47
79	n1039	n1040	30	400	1.895
80	n1040	n1041	30	400	1.74
81	n1041	n1042	30	400	1.615
82	n1042	n1043	30	400	1.63
83	n1043	n1044	30	400	1.715
84	n1044	n1045	30	400	1.805
85	n1048	n1047	29.89	400	1.545
86	n1047	n1046	25.68	400	1.7
87	n1045	n1046	29.89	400	1.825
88	n1047	n1735	28.58	600	2.47
89	n1735	n1736	29.99	600	2.875
90	n1736	n1737	29.54	600	2.395
91	n1737	n1738	28.92	600	2.48
92	n1738	n1739	30	600	2.645

93	n1739	n1740	29.55	600	2.46
94	n1740	n1741	29.94	600	2.745
95	n1741	n1742	29.82	600	3.41
96	n1742	n1743	30	600	3.74
97	n1743	n1744	29.76	600	4.135
98	n1744	n1745	29.83	600	4.47
99	n1745	n1746	29.91	600	4.73
100	n1746	n1747	29.97	600	4.73
101	n1747	n1748	30	600	5.07
103	n1749	n1750	29.99	600	1.3
104	n1750	n1751	30	600	1.575
105	n1751	n1752	29.99	600	1.785
106	n1752	n1753	29.91	600	1.93
107	n1753	n1754	30	600	2.145
108	n1754	n1755	29.96	600	2.395
109	n1755	n1756	30	600	2.565
110	n1756	n1757	30	600	2.77
111	n1757	n1758	29.99	600	3.05
112	n1758	n1759	29.99	600	3.375
113	n1759	n1760	15.05	600	4.065
114	n1778	n1777	26.04	180	1.15
115	n1777	n1776	29.99	180	1.34
116	n1776	n1775	30	180	1.7
117	n1775	n1774	29.99	180	2.035
118	n1774	n1773	25.36	180	2.26
119	n1773	n1769	21.23	180	2.485
120	n1772	n1771	30	180	1.28
121	n1771	n1769	39.93	180	2.03
122	n1769	n1768	30	180	2.75
123	n1768	n1767	30	180	2.915
124	n1767	n1766	27.82	180	3.06
125	n1766	n1765	29.85	180	3.205
126	n3125	n1787	19.24	180	3.23
127	n1787	n1786	28.98	180	2.965
128	n1786	n1785	30	180	3.85
129	n1785	n1784	29.93	180	4.12
130	n1784	n1783	29.95	180	3.42
131	n1783	n1782	29.12	180	1.99
132	n1782	n1781	29.19	180	1.135
133	n1781	n1780	29.98	180	1.135
134	n1780	n1779	29.79	180	1.15
135	n1779	n1764	28.65	180	2.28
136	n1765	n1764	24.08	180	3.34
137	n1764	n1763	27.1	180	3.435

138	n1763	n1762	30	180	3.585
139	n1762	n1761	30	180	3.845
140	n1761	n1760	29.94	180	4.28
141	n1760	n1788	29.98	600	4.645
142	n1788	n1789	30	600	5.02
143	n1789	n1790	29.93	600	5.37
144	n1790	n1791	30	600	5.43
145	n1791	n1792	29.98	600	5.58
146	n1792	n1793	29.6	600	5.795
148	n1794	n1795	26.83	600	1.585
149	n1795	n1796	30	600	1.995
150	n1796	n1797	29.81	600	1.945
151	n1797	n1798	28.8	600	1.955
152	n1798	n1799	28.97	600	2.495
153	n1799	n1800	29.93	600	3.03
154	n1800	n1801	29.81	600	2.895
155	n1801	n1802	30.07	600	2.73
156	n1802	n1803	29.87	600	3.145
157	n1803	n1804	30	600	3.765
158	n1804	n1805	29.99	600	4.075
159	n1805	n1806	29.99	600	4.29
160	n1810	n1808	29.25	180	4.195
161	n1812	n1811	30	180	3.92
162	n1811	n1810	29.99	180	3.665
163	n1806	n1807	30	600	4.55
164	n1807	n1808	29.92	600	4.8
165	n3272	n3271	30	180	4.245
166	n3271	n1817	20.76	180	4.245
167	n1817	n1816	30	180	4.305
168	n1816	n1815	29.99	180	4.46
169	n1815	n1814	29.98	180	4.775
170	n1808	n1813	20.45	600	5.015
171	n1813	n1814	30	600	5.185
172	n1824	n1823	30	180	3.65
173	n1823	n1822	30	180	3.9
174	n1822	n1821	29.99	180	3.93
175	n1821	n1820	30	180	4.085
176	n1820	n1819	29.99	180	4.955
177	n1814	n1819	38.81	600	5.42
179	n1825	n1826	30	600	1.36
180	n1826	n1827	29.94	600	1.685
181	n1833	n1830	27.19	180	1.915
182	n1831	n1830	21.18	180	1.81
183	n1830	n1829	29.98	180	1.985

184	n1829	n1828	29.99	180	2.15
185	n1828	n1827	21.44	180	2.025
186	n1834	n1833	23.17	180	1.705
187	n1827	n1835	24.95	600	2.35
188	n1835	n1836	29.99	600	3.105
189	n1836	n1837	29.99	600	3.43
190	n1837	n1838	30	600	3.61
191	n1838	n1839	28.83	600	3.845
192	n1847	n1846	29.65	180	2.015
193	n1846	n1844	24.35	180	2.915
194	n1844	n1843	29.9	180	3.555
195	n1843	n1842	29.89	180	3.53
196	n1842	n1841	30	180	3.81
197	n1841	n1840	30	180	4.285
198	n1840	n1839	31.59	180	4.11
199	n1863	n1862	30	180	3.765
200	n1862	n1861	30	180	4.205
201	n1861	n1860	30	180	4.41
202	n1860	n1858	40.22	180	4.7
203	n1839	n1855	25.04	600	4.05
204	n1855	n1856	29.98	600	4.295
205	n1856	n1857	29.99	600	4.69
206	n1857	n1858	29.99	600	4.915
208	n3108	n1849	36.55	180	1.25
209	n1849	n1851	20.23	180	1.555
210	n1851	n1852	30	180	1.98
211	n1852	n1853	29.87	180	2.345
212	n1853	n1854	29.42	180	2.575
213	n1854	n1846	35.21	180	2.595
214	n1867	n3110	30.14	600	1.3
215	n3110	n1868	29.86	600	1.61
216	n1868	n1869	29.95	600	1.635
217	n1869	n1870	30	600	1.43
218	n1870	n1871	29.17	600	1.41
219	n1871	n1872	27.21	600	1.54
220	n1872	n1873	29.95	600	1.715
221	n1873	n1874	30	600	1.945
223	n3112	n1898	22.29	180	1.4
224	n1898	n1897	29.96	180	1.855
225	n1897	n1896	30	180	2.405
226	n1896	n1893	26.78	180	2.6
227	n1894	n1895	29.93	180	1.675
228	n1895	n1893	12.75	180	2.325
229	n1893	n1892	29.86	180	2.425

230	n1892	n1891	29.97	180	2.495
231	n1891	n1890	27.23	180	2.72
232	n1886	n1885	29.42	180	3.53
233	n1885	n1882	29.78	180	2.985
234	n3111	n1887	20.71	180	2.205
235	n1887	n1884	29.88	180	2.915
236	n1880	n1881	26.98	180	3.215
237	n1881	n1882	29.94	180	2.715
238	n1882	n1883	29.59	180	2.9
239	n1883	n1884	14.28	180	3.42
240	n1884	n1888	29.95	180	3.7
241	n1888	n1889	29.35	180	3.9
242	n1890	n1889	31.7	180	3.395
243	n1889	n1878	38.82	180	4.13
244	n1878	n1877	30	180	4.38
245	n1874	n1877	41.48	600	3.26
246	n1877	n1899	30.91	600	4.82
248	n1900	n1901	27.7	600	5.71
249	n1915	n1914	26.35	180	1.585
250	n1914	n1913	24.61	180	2.39
251	n1913	n1912	30	180	2.94
252	n1912	n1911	29.78	180	3.255
253	n1911	n1910	29.76	180	3.455
254	n1910	n1909	29.97	180	3.605
255	n1909	n1908	26.65	180	3.975
256	n1908	n1907	23.28	180	4.225
257	n1907	n1906	28.81	180	4.275
258	n1906	n1904	26.16	180	4.555
259	n1904	n1903	29.89	180	4.83
260	n1903	n1902	30	180	5.005
261	n1902	n1901	29.89	180	5.455
262	n1922	n1921	28.2	180	1.335
263	n1921	n1920	27.03	180	1.785
264	n1920	n1919	28.31	180	2.29
265	n1919	n1918	29.87	180	2.735
266	n1918	n1917	29.96	180	3.13
267	n1917	n1916	30	180	3.415
268	n1916	n1900	29.97	180	4.56
270	n1923	n1924	21.23	600	1.23
272	n1925	n1926	29.6	600	1.715
273	n1926	n1927	30	600	2.04
274	n1927	n1928	29.98	600	2.345
275	n1928	n1929	29.97	600	2.615
276	n1929	n1930	30	600	2.8

277	n1930	n1931	29.91	600	3.165
279	n1942	n1941	29.95	180	1.185
280	n1941	n1940	29.99	180	1.3
281	n1940	n1939	30	180	1.405
282	n1939	n1938	30	180	1.445
283	n1938	n1937	28.91	180	1.56
284	n1937	n1936	29.97	180	1.735
285	n1936	n1935	29.99	180	1.805
286	n1935	n3113	30.81	180	1.99
289	n2089	n2088	29.66	180	1.565
290	n2088	n2087	30	180	1.85
291	n2087	n2085	29.84	180	2.07
292	n2086	n2085	21.5	180	1.67
293	n2085	n2084	29.91	180	2.34
294	n2084	n2083	30	180	2.89
295	n2083	n1943	20.98	180	3.955
296	n1943	n1933	22.04	600	4
297	n1931	n1933	18.82	600	3.425
298	n1943	n1944	29.12	600	4.685
299	n1944	n1945	30	600	4.855
301	n1946	n1947	29.95	600	1.24
302	n1947	n1948	30	600	1.44
303	n1948	n1949	30	600	1.66
304	n1949	n1950	29.97	600	1.805
305	n1950	n1951	30	600	1.88
306	n1951	n1952	29.98	600	1.99
307	n1952	n1953	29.93	600	2.135
308	n1953	n1954	26.58	600	2.28
309	n1954	n1955	25.14	600	2.435
310	n1955	n1956	30	600	2.54
311	n1956	n1958	39.94	600	2.67
312	n1958	n1959	18.18	600	2.84
313	n1959	n1960	29.65	600	3.05
314	n1960	n1961	29.96	600	3.35
315	n1961	n1962	29.9	600	3.665
316	n1962	n1963	29.99	600	3.96
317	n1963	n1964	29.82	600	4.14
318	n1964	n1965	30	600	4.255
319	n1965	n1966	29.98	600	4.375
320	n1966	n1968	31.2	600	4.525
321	n1981	n1983	28.49	180	1.15
322	n3115	n1980	26.58	180	1.325
323	n1980	n1981	29.69	180	1.15
324	n1983	n1984	29.48	180	1.15

325	n1984	n1985	29.82	180	1.23
326	n1985	n1986	29.92	180	1.47
327	n1986	n1968	29.85	180	3.125
328	n1968	n1970	38.78	600	4.71
329	n1970	n1971	29.99	600	4.925
330	n1971	n1972	24.1	600	5.31
332	n1973	n1974	15.49	600	1.325
334	n1974	n1975	13.52	600	1.585
335	n1975	n1976	29.99	600	1.775
336	n1976	n1977	29.98	600	1.925
337	n1977	n1978	29.98	600	1.935
338	n1978	n1979	30	600	1.815
339	n3116	n1987	18.9	180	3.71
340	n1987	n1988	29.68	180	2.79
341	n1988	n1989	29.9	180	1.615
342	n1989	n1990	29.97	180	1.215
343	n1990	n1991	29.49	180	1.27
344	n1991	n1992	29.81	180	1.205
345	n1992	n1728	30.76	180	2.18
346	n1979	n1728	29.86	600	2.47
347	n3270	n3269	29.98	180	1.29
348	n3269	n1727	25.36	180	1.65
349	n1727	n1726	29.71	180	2.045
350	n1726	n1725	30	180	2.355
351	n1725	n1724	29.95	180	2.66
352	n1724	n1723	29.93	180	2.91
353	n1723	n1722	30	180	3.08
354	n1722	n1721	29.94	180	3.24
355	n1721	n1720	29.97	180	3.395
356	n1720	n1719	29.9	180	3.52
357	n1719	n1728	31.93	180	3.385
358	n1728	n1729	29.38	600	2.4
359	n1729	n1730	29.85	600	1.37
360	n1730	n1731	28.42	600	1.15
361	n1731	n1732	29.71	600	1.15
362	n1732	n1733	29.36	600	1.73
363	n1733	n1734	19.19	600	2.025
364	n1137	n1136	27.48	180	1.27
365	n1020	n1021	29.97	400	1.16
367	n1018	11	10.62	300	6.1
368	n1748	12	15.21	600	5.62
369	n1793	13	19.06	600	5.93
370	n1819	14	24.43	600	5.7
371	n1858	n1864	29.99	600	5.38

372	n1864	n1865	30	600	5.46
373	n1865	n1866	29.81	600	5.79
374	n1866	15	14.59	600	6.01
376	n1945	17	18.22	600	4.98
377	n1972	18	20.32	600	5.585
378	n1003	n1004	30	300	1.425
379	n1130	19	14.49	180	3.42
380	n1734	10	14.64	600	1.97
383	n1899	n1900	13.8	600	5.405
384	n1924	n1925	29.58	600	1.43
385	n3113	n1933	27.09	180	2.78
386	n1901	21	22.42	600	5.86
387	n1032	22	12.45	400	3.875
388	n1127	n1002	34.3	180	4.49
389	n1002	23	18.61	180	5.9

ANNEXURE A.1

NETWORK DETAILS IN ZONE 2					
PIPE NO	**Start Node**	**End node**	**Length**	**Diameter**	**Average depth**
2	n2482	n2481	29.88	0.18	2.25
3	n2481	n2480	29.85	180	2.575
4	n2480	n2479	29.96	180	2.86
5	n2479	n2478	29.93	180	3.49
6	n2478	n2476	44.21	180	3.79
7	n2470	n2476	38.7	180	2.36
8	n2471	n2472	29.98	180	1.695
9	n2472	n2473	29.97	180	1.42
10	n2473	n2474	29.96	180	1.21
11	n2474	n1500	26.21	180	1.375
12	n1500	n1501	29.97	180	1.415
13	n1501	n1492	29.97	180	1.245
14	n1492	n1490	40.86	180	1.185
20	n2487	n2488	29.97	180	2.39
21	n2488	n2489	22.5	180	2.19
22	n2489	n2483	24.85	180	2.08
23	n2483	n2484	29.76	180	1.58
24	n2484	n2485	29.99	180	1.15
25	n2485	n2470	31.85	180	1.15
27	n2490	n2491	23.85	180	1.62

28	n2491	n2502	33.87	180	1.24
29	n2502	n2501	28.11	180	1.24
30	n2491	n2494	47.3	180	1.36
33	n2496	n931	33.98	180	3.885
34	n2496	n2497	34.52	180	2.625
39	n1623	n1620	25.53	180	2.58
40	n1621	n1620	26.94	180	2.58
41	n1620	n1619	29.58	180	3.82
42	n1619	n1617	33.4	180	3.085
43	n1617	n1615	39.92	180	3.835
44	n1615	n1614	30	180	5.075
45	n1614	n1613	23.91	180	5.04
46	n1613	n1611	35.4	180	4.61
47	n1611	n1609	25.42	180	4.345
48	n1609	n1608	30	180	4.815
49	n1608	n1607	29.99	180	5.42
51	n1606	n1605	29.88	180	1.855
52	n1605	n2030	30.36	180	3.35
54	n1685	n1684	29.97	180	1.225
55	n3119	n1685	15.37	180	1.15
56	n1684	n1683	30	180	1.405
57	n1683	n1681	40.19	180	1.935
58	n1681	n1679	43.76	180	2.845
59	n1679	n1678	29.97	180	3.775
60	n1678	n1677	28.88	180	3.905
61	n1677	n1676	29.83	180	3.71
62	n1676	n1675	30	180	3.77
63	n2030	n2031	29.98	180	4.01
64	n2031	n2032	29.96	180	3.87
65	n2032	n2033	29.99	180	4.055
66	n2033	n2034	29.98	180	4.425
67	n2034	n1674	29.73	180	4.86
68	n1675	n1674	29.75	180	4.415
69	n1674	n1673	25.76	180	6.045
71	n1672	n1671	29.89	180	2.485
73	n1670	n1669	29.97	180	1.525
75	n1669	n1668	30	180	2.04
76	n1668	n1667	29.71	180	1.665
77	n1583	n1584	29.98	180	1.66
78	n1584	n1585	29.83	180	2.205
79	n1585	n1586	29.92	180	2.15
80	n1586	n1587	29.87	180	1.605
81	n1587	n1588	29.72	180	1.15
83	n1588	n1599	38.55	180	1.15

84	n1599	n1598	28.47	180	1.675
85	n1598	n1597	29.99	180	2.68
86	n1597	n1596	30	180	3.37
87	n1596	n1594	38.34	180	3.17
88	n1594	n1592	17.91	180	2.595
89	n1592	n1591	29.99	180	2.21
91	n1567	n1568	29.6	180	1.15
92	n1568	n1569	29.9	180	1.14
93	n1569	n1570	30	180	1.115
94	n1570	n1571	29.96	180	1.125
95	n1582	n1581	29.95	180	2.325
96	n1581	n1580	14.12	180	2.045
97	n1580	n1579	15.45	180	2.185
98	n1579	n1578	23.77	180	1.29
99	n1578	n1576	36.1	180	1.46
100	n1576	n1573	32.67	180	1.46
101	n1574	n1573	11.47	180	1.26
102	n1575	n1574	34.66	180	1.485
103	n1573	n1572	29.97	180	1.445
104	n1571	n1572	16.08	180	1.445
105	n1572	n2980	16.65	180	1.95
106	n2980	n2981	30.7	180	2.855
107	n2981	n2983	28.45	180	3.85
108	n2983	n2991	30.79	180	4.47
109	n2991	n2990	29.99	180	4.65
110	n2990	n2989	29.99	180	4.55
111	n2989	n2988	29.99	180	3.695
112	n2988	n2987	29.97	180	2.8
113	n2987	n2986	29.57	180	2.8
114	n2986	n2985	29.94	180	2.8
115	n2985	n2984	29.94	180	2.8
116	n2984	n1590	29.92	180	2.65
117	n1591	n1590	29.99	180	2.245
118	n1590	n1600	20.33	180	2.5
119	n1600	n1601	29.9	180	2.83
127	n1690	n1689	30	180	2.235
137	n2022	n2023	29.9	180	2
138	n2023	n2024	29.96	180	3.675
139	n2024	n2025	29.97	180	5.23
140	n2025	n2026	29.99	180	6.21
141	n2026	n2015	29.13	180	6.685
142	n2027	n2028	29.83	180	1.235
143	n2028	n1687	40.56	180	1.205
144	n1698	n1697	29.94	180	4.85

145	n1697	n1696	21.68	180	5.27
146	n1696	n1695	29.99	180	5.525
147	n1695	n1694	29.87	180	5.355
148	n1694	n1693	29.89	180	6.625
149	n1693	n1691	26.09	180	6.805
150	n1691	n1690	29.55	180	4.34
151	n1690	n1689	19.03	180	2.235
152	n1689	n1687	34.44	180	1.155
153	n2012	n2013	29.9	180	4.1
154	n2013	n2014	29.92	180	5.795
155	n2014	n2015	25.03	180	6.57
156	n1687	n1667	35.63	180	1.155
157	n1473	n1476	29.95	180	2.22
158	n1476	n1477	26.81	180	1.84
159	n1479	n1477	29.89	180	2.11
160	n1480	n1477	29.91	180	1.7
161	n1481	n1480	30	180	1.89
162	n2482	n1490	29.89	180	1.665
163	n1667	n1666	29.88	180	1.15
164	n1666	n1665	29.93	180	1.15
165	n1665	n1664	29.99	180	1.15
166	n1664	n1663	29.94	180	1.15
167	n1663	n1662	29.99	180	1.15
168	n1662	n1661	29.97	180	1.15
169	n1661	n1601	18.45	180	2.155
170	n1601	n1645	29.95	180	2.84
171	n1645	n1644	29.93	180	2.155
172	n1644	n1643	29.91	180	1.47
173	n1656	n1657	29.54	180	1.79
174	n1657	n1652	35.07	180	2.74
175	n1660	n1652	37.91	180	3.495
176	n1652	n1651	29.83	180	2.1
177	n1651	n1650	27.8	180	1.15
178	n1650	n1649	29.89	180	1.15
179	n1649	n1648	29.91	180	1.15
180	n1648	n1647	29.44	180	1.15
181	n1647	n1646	29.95	180	1.15
182	n1642	n1641	29.84	180	1.15
183	n1641	n1639	21.34	180	1.15
184	n1646	n1643	15.93	180	1.15
185	n1643	n1636	25.24	180	1.15
186	n1636	n1634	31.5	180	1.15
187	n1634	n1633	28.44	180	1.35
188	n1639	n1633	33.95	180	1.35

189	n1633	n1632	29.57	180	1.41
190	n1632	n1631	29.95	180	1.21
191	n1631	n1630	29.94	180	1.225
192	n1630	n1629	29.97	180	1.3
193	n1629	n1628	29.89	180	1.895
194	n1628	n1627	29.6	180	3.02
195	n1627	n1626	29.97	180	4.155
196	n2040	n2039	29.9	180	1.8
197	n2039	n2038	29.99	180	2.89
198	n1626	n2037	24.52	180	4.815
199	n2038	n2037	29.82	180	4.1
200	n963	n964	29.96	180	1.17
201	n964	n965	29.88	180	1.16
202	n965	n966	29.95	180	1.185
203	n966	n967	29.95	180	1.2
204	n967	n968	29.94	180	1.185
205	n968	n969	29.99	180	1.17
206	n969	n970	29.99	180	1.195
207	n970	n971	29.93	180	1.23
208	n971	n972	29.97	180	1.315
209	n972	n973	28.73	180	1.675
210	n973	n974	29.78	180	1.575
211	n974	n975	29.98	180	1.095
212	n975	n977	33.81	180	2.035
214	n979	n981	23.25	180	4.92
215	n981	n982	29.71	180	3.295
216	n982	n991	40.78	180	1.58
217	n991	n989	48.66	180	1.99
218	n989	n988	29.99	180	3.46
219	n988	n987	29.94	180	4.545
220	n987	n986	28.76	180	5.205
221	n963	n955	29.59	180	1.305
222	n955	n2999	37.94	180	1.285
223	n2999	n3000	28.81	180	1.205
224	n3000	n3001	29.66	180	1.23
225	n3001	n3002	29.84	180	1.35
226	n3002	n3003	29.69	180	1.6
227	n3003	n3004	29.87	180	1.885
228	n3004	n1538	29.59	180	2.915
229	n2494	n2496	42.86	180	2.44
230	n2497	n2498	29.96	180	1.82
231	n2498	n2499	29.99	180	1.93
232	n2499	n2500	29.95	180	2.065
233	n2500	n1507	27.58	180	2.48

234	n1507	n2465	23.17	180	2.27
235	n2465	n2466	29.92	180	1.88
236	n1507	n1505	18.66	180	2.565
237	n1505	n1504	29.57	180	1.975
238	n1504	n1503	28.8	180	1.35
239	n1504	n2468	29.17	180	1.38
240	n2468	n2467	29.96	180	1.155
241	n1507	n1508	29.97	180	2.595
242	n1508	n1509	29.99	180	2.285
243	n1509	n1498	29.98	180	2.01
244	n1498	n3006	46.64	180	1.645
245	n1498	n1511	33.36	180	2.26
246	n1511	n1512	16.38	180	2.015
247	n1512	n1514	23.87	180	1.555
248	n1498	n1497	29.91	180	1.675
249	n1497	n1496	29.92	180	1.415
250	n1496	n1494	26.39	180	1.285
251	n1494	n1492	39.95	180	1.185
252	n929	n932	29.99	180	1.315
253	n932	n933	30	180	1.46
254	n933	n934	30	180	1.805
255	n934	n935	30	180	2.535
256	n935	n2457	51.61	180	2.72
257	n2457	n2458	29.82	180	2.385
258	n938	n939	29.8	180	4.805
259	n938	n942	53.73	180	4.325
260	n942	n2459	22.95	180	3.725
261	n2459	n2460	29.64	180	2.005
262	n2460	n2461	29.85	180	1.24
263	n948	n949	30	180	0.98
264	n949	n951	400	180	0.8
265	n951	n952	30	180	1.05
266	n952	n953	30	180	1.05
267	n953	n955	30	180	1.21
268	n948	n956	30	180	1.705
269	n956	n957	30	180	1.99
270	n957	n958	30	180	1.62
271	n958	n960	30	180	1.235
272	n960	n961	30	180	1.16
273	n961	n3145	30	180	1.805
274	n1996	n1997	14.79	180	2
275	n1997	n1999	24.33	180	2.81
276	n1999	n2000	19.73	180	3.53
277	n2000	n2001	45.25	180	3.425

278	n2000	n2003	27.91	180	4.53
279	n2003	n2004	29.73	180	5.95
281	n2005	n2006	25.17	180	2.28
282	n2006	n2007	29.89	180	3.45
283	n2007	n2008	29.72	180	4.26
284	n2008	n2009	29.97	180	4.92
285	n2009	n2010	29.56	180	5.7
286	n2010	n1993	19.73	180	6.51
287	n1993	n1994	22.09	180	5.99
289	n1994	n1995	29.09	180	4.355
290	n1995	n1705	29.77	180	2.725
291	n1717	n1716	29.96	180	1.615
292	n1716	n1715	29.92	180	2.87
293	n1715	n1714	29.28	180	5.095
295	n1426	n1427	22.83	180	1.15
296	n1427	n1429	27.36	180	1.15
297	n1429	n1430	29.84	180	1.34
298	n1430	n1431	28.79	180	1.34
299	n1431	n1433	26.49	180	1.15
300	n2272	n2265	29.9	180	1.525
301	n2265	n2266	22.95	180	1.83
302	n2266	n2267	29.9	180	1.455
303	n2267	n2268	27.03	180	1.15
304	n2268	n2269	29.3	180	1.155
305	n2269	n2270	29.72	180	1.27
306	n2270	n2264	29.82	180	1.52
308	n1424	n1423	29.64	180	2.42
309	n1423	n1422	29.82	180	2.395
310	n1422	n1420	37.54	180	1.125
311	n1420	n1419	20.05	180	1.15
312	n1419	n1418	28.46	180	1.15
313	n1418	n2271	29.89	180	2.455
314	n1417	n1416	24.81	180	1.15
315	n1416	n1415	29.88	180	1.15
316	n1415	n1414	29.99	180	1.3
317	n1414	n1413	29.93	180	3.34
318	n1413	n1412	29.94	180	3.855
319	n1412	n1408	29.94	180	2.38
320	n1408	n1411	29.92	180	1.815
321	n1411	n1410	30	180	1.44
322	n1410	n1403	26.55	180	2.38
323	n3147	n3148	20.81	180	1.15
324	n3148	n1406	35.15	180	1.475
326	n1406	n1404	41.89	180	2.12

327	n1404	n1403	17.73	180	2.835
328	n1403	n1401	40.56	180	2.165
329	n1401	n3250	19.82	180	2.065
330	n3250	n3155	13.81	180	2.09
331	n3155	n2271	19.86	180	2.455
333	n2273	n2274	18.54	180	1.15
334	n2274	n3152	19.6	180	1.15
335	n3152	n2277	20.99	180	1.15
336	n2277	n2279	15.94	180	1.23
337	n2279	n3154	16.41	180	1.23
338	n3154	n2281	23.37	180	1.075
339	n2281	n3150	16.98	180	1
340	n1435	n1436	18.23	180	1.15
341	n1436	n3150	27.2	180	1.075
342	n3150	n1438	39.63	180	1.075
343	n1438	n1442	42.58	180	1.15
344	n1433	n1442	33.88	180	1.15
345	n2264	n2263	27.05	180	1.82
346	n2263	n2262	29.99	180	1.97
347	n2259	n2261	37.79	180	2.825
348	n2248	n2249	29.91	180	1.15
349	n2249	n2250	29.94	180	1.15
350	n2250	n2251	29.88	180	1.26
351	n2254	n2253	29.97	180	1.6
352	n2253	n2252	18.7	180	1.335
353	n2251	n2252	30	180	1.42
354	n2252	n2255	19.43	180	1.62
355	n2255	n2256	30	180	1.97
356	n2256	n2257	29.1	180	2.535
357	n2262	n2259	29.86	180	1.785
358	n2259	n2258	27.85	180	1.38
359	n2258	n2257	23.84	180	2.025
360	n2257	n2591	27.53	180	3.17
361	n2591	n2593	27.31	180	3.385
362	n2593	n2594	29.83	180	3.55
363	n2594	n2595	29.85	180	3.82
364	n2595	n2596	29.81	180	2.975
365	n2596	n1443	29.53	180	1.615
366	n1051	n1052	29.94	300	5.4
367	n1052	n1053	30	300	5.045
368	n1053	n1054	29.93	300	4.715
369	n3105	n1056	18.75	180	3.54
370	n1056	n1055	30	180	4.03
371	n1055	n1054	25.67	180	4.405

372	n1054	n2578	34.23	300	4.385
373	n2578	n2579	29.31	300	3.98
374	n2581	n2580	25.12	180	3.05
375	n2579	n2580	29.5	300	3.625
376	n2580	n2583	43.81	300	2.845
377	n2583	n2584	29.42	300	1.885
378	n2584	n2585	29.82	300	1.455
379	n2585	n2586	29.07	300	1.22
380	n2586	n2587	29.95	300	1.37
381	n2587	n2588	29.82	300	1.395
382	n2588	n2589	29.9	300	1.15
384	n1443	n1444	29.46	300	1.895
385	n1444	n1445	29.84	300	3.595
386	n1445	n1446	30	300	4.715
388	n1446	n1447	30	300	4.8
389	n1447	n1448	29.99	300	4.56
390	n3251	n1440	40.85	300	1.15
391	n2247	n2246	29.95	180	1.15
392	n2246	n2244	24.76	180	1.15
393	n2244	n2243	29.96	180	1.15
394	n2243	n2242	21.16	180	1.15
395	n2242	n2240	38.3	180	1.15
396	n2240	9	10.63	180	1.2
397	n2313	n2312	29.89	180	3.215
398	n2312	n2311	29.91	180	3.73
399	n2311	n2310	29.92	180	3.805
400	n2310	n2309	29.98	180	3.235
401	n2306	n2305	15.53	180	1.43
402	n2305	n2304	14.44	180	2.215
403	n2304	n2303	29.99	180	3.085
404	n2303	n2302	29.99	180	4.02
405	n2302	n2301	29.98	180	5.03
406	n2301	n2300	29.96	180	6.065
407	n2300	n2299	27.13	180	5.17
408	n2309	n2299	19.33	180	3.36
409	n2299	n2297	17.03	180	3.895
410	n2297	n2296	16.24	180	3.46
411	n2296	n2295	18.85	180	2.105
412	n2295	n2293	40.56	180	1.2
413	n2293	n2292	29.98	180	1.15
414	n2292	n2291	29.99	180	1.15
415	n2291	n2290	29.99	180	1.15
416	n2290	n2289	29.94	180	1.15
417	n2289	n2288	29.9	180	1.15

418	n2283	n2284	29.99	180	1.93
419	n2284	n2285	29.96	180	1.505
420	n2285	n2286	29.89	180	1.15
421	n2286	n2287	27.01	180	1.15
422	n2288	n2287	29.9	180	1.15
424	n1400	n1399	29.99	180	1.425
425	n1399	n1398	29.39	180	1.82
426	n1398	n1397	29.18	180	1.985
427	n2287	n2573	43.18	180	1.15
428	n2573	n2572	9.63	180	1.15
429	n1397	n1396	29.17	180	1.59
430	n1396	n1394	26.54	180	1.15
431	n1394	n1393	33.85	180	1.15
432	n2572	n2571	19.31	180	1.15
433	n2571	n2570	29.99	180	1.15
434	n1393	n1391	32.59	180	1.585
435	n1391	n1390	21.27	180	2.44
436	n2567	n2566	29.95	180	1.15
437	n2566	n2565	29.99	180	1.15
439	n2564	n2562	42.3	180	1.15
440	n2570	n2569	29.99	180	1.15
441	n2569	n2562	25.95	180	1.15
442	n2562	n1379	29.54	180	1.15
443	n1379	n1377	29.96	180	1.15
444	n1377	n1376	29.86	180	1.15
445	n1376	n1375	29.95	180	1.15
446	n1390	n1388	36.04	180	2.67
447	n1388	n1387	15.76	180	2.395
448	n1387	n1386	12.38	180	1.95
449	n1386	n1385	29.96	180	1.37
450	n1385	n1384	29.92	180	1.15
451	n2575	n2574	29.97	180	1.15
452	n2574	n1384	27.36	180	1.15
453	n1384	n1383	29.88	180	1.15
454	n1383	n1382	21.62	180	1.15
455	n1382	n1380	37.5	180	1.15
456	n1380	10	11.63	180	1.2
457	n2503	n2504	29.81	180	2.56
458	n2504	n2505	29.86	180	3.535
459	n2505	n2507	26.52	180	2.88
460	n2507	n2508	29.82	180	1.48
461	n2508	n2509	29.84	180	1.15
462	n2509	n2510	29.94	180	1.15
463	n2510	n2518	28.88	180	1.075

464	n2518	n2517	29.6	180	1.075
465	n2517	n2516	29.98	180	1.15
466	n2516	n2515	29.96	180	1.15
467	n2515	n2514	29.71	180	1.15
468	n2514	n2513	29.97	180	1.655
469	n2513	n2512	29.98	180	2.005
470	n2512	n2511	29.99	180	1.595
471	n2511	11	9.92	180	1.39
472	n938	n2457	21.37	180	3.16
473	n1515	n1514	19.14	180	1.445
474	n2458	n1515	51.61	180	1.725
475	n945	n944	29.72	180	3.645
476	n944	n943	29.9	180	4.38
477	n943	n942	13.25	180	3.71
478	n926	n3040	29.73	180	1.15
479	n3040	n3039	13.29	180	1.375
480	n3039	n919	32.71	180	1.375
481	n919	n918	31.67	180	1.15
482	n918	n917	17.01	180	1.15
483	n917	n916	30.21	180	1.15
484	n925	n924	29.64	180	2.325
485	n924	n923	14.67	180	1.15
486	n923	n922	13.74	180	1.56
487	n922	n921	29.97	180	1.58
488	n921	n920	29.94	180	1.17
489	n920	n915	29.94	180	1.15
490	n916	n915	29.75	180	1.15
491	n914	n913	31.8	180	1.475
492	n915	n913	24.66	180	1.475
493	n912	n911	29.92	180	3.54
494	n911	n909	34.56	180	3.085
495	n913	n909	29.18	180	2.24
496	n908	n907	28.23	180	3.825
497	n907	n906	29.84	180	3.055
498	n909	n906	24.5	180	2.645
499	n906	n905	29.98	180	2.45
500	n905	n904	29.97	180	1.95
501	n904	n903	29.96	180	1.38
502	n903	n902	29.92	180	1.15
503	n902	12	6.29	180	1.2
504	n2576	n2575	29.66	180	1.15
505	n986	n984	37.83	180	3.285
506	n1558	n1557	21.72	180	1.15
507	n1557	n3268	29.91	180	1.35

508	n3268	n984	29.65	180	1.35
514	n1553	n1554	21.31	180	1.3
515	n1554	n1555	29.9	180	1.5
516	n1555	n1556	29.81	180	1.615
517	n1556	n1552	29.88	180	1.59
518	n984	n1552	23.96	180	1.325
520	n1551	n1550	17.09	180	1.715
521	n1552	n1551	30	180	1.56
522	n1550	n1548	42.24	180	2.58
523	n1548	n1547	29.99	180	3.83
524	n1547	n1546	29.92	180	4.565
525	n1538	n1536	43.48	180	3.38
526	n1546	n1545	29.45	180	5.22
527	n1545	n1538	22.34	180	4.69
530	n2437	n2439	36.3	180	1.15
531	n2439	n2440	20.09	180	1.15
532	n2440	n2443	30.02	180	1.15
533	n2443	n1539	29.97	180	2.29
535	n1542	n1540	32.29	180	2.2
536	n1540	n1539	27.55	180	3.34
537	n1539	n2445	29.76	180	4.48
538	n2445	n2076	37.67	180	5.495
539	n2082	n2081	21.23	180	1.29
540	n2081	n2079	38.49	180	1.975
541	n2079	n2078	29.69	180	3.665
542	n2078	n2076	16.56	180	5.135
543	n2076	n2077	29.09	180	4.51
544	n2077	n2074	29.3	180	2.355
545	n2074	n2075	29.18	180	1.15
546	n2075	n2072	29.76	180	1.15
547	n2072	n2071	26.39	180	1.445
548	n2071	n2070	29.9	180	1.445
549	n2070	n2069	27.11	180	1.15
550	n2069	n2068	29.97	180	1.7
551	n2068	n2067	26.92	180	1.975
552	n2067	n2066	26.9	180	1.62
553	n2066	n2065	29.96	180	2.18
554	n1535	n1534	25.54	180	1.15
555	n1534	n1533	34.42	180	1.2
556	n1533	n1532	29.99	180	1.595
557	n3127	n2455	40.65	180	1.84
558	n2455	n2453	39.52	180	3.635
559	n2448	n2449	21.71	180	3.5
560	n2449	n2450	29.92	180	2.77

561	n2450	n2451	29.96	180	3.565
562	n2451	n1531	17.9	180	3.9
563	n2453	n2452	20.35	180	5.16
564	n2452	n1531	29.79	180	4.395
565	n1532	n1531	29.91	180	2.575
567	n1529	n1527	19.21	180	2.575
568	n1527	n1524	31.69	180	4.055
569	n2463	n2464	29.86	180	2.435
570	n2464	n1524	41.69	180	4.31
571	n1524	n1522	22.75	180	4.44
572	n1522	n1521	29.7	180	2.83
573	n1521	n1520	29.73	180	1.415
574	n1520	n2384	29.79	180	1.6
575	n1519	n1518	29.94	180	2.085
576	n1518	n1517	29.99	180	1.5
577	n1517	n1515	28.15	180	1.24
578	n2384	n2386	39.22	180	1.6
579	n3265	n3264	18.86	180	1.425
580	n2386	n2396	25.31	180	1.57
581	n3264	n2396	19.26	180	1.845
582	n2396	n2395	24	180	2.005
583	n2395	n2394	29.95	180	2.22
584	n2394	n2393	29.94	180	3.04
585	n2393	n2390	31.27	180	4.085
586	n2390	n2389	26.12	180	5.185
587	n2389	n2403	27.56	180	6.16
588	n2397	n2398	29.4	180	3.875
589	n2398	n2400	33.92	180	6.31
590	n2400	n2401	22.79	180	5.655
591	n2401	n2403	21.58	180	5.875
600	n2424	n2431	37.41	180	0.875
601	n2431	n2433	28.12	180	1.15
602	n2433	n2063	23.36	180	2.08
603	n2065	n2064	29.94	180	3.57
604	n2064	n2063	24.7	180	3.665
605	n2434	n2426	29.12	180	2.045
606	n2426	n2427	29.85	180	2.045
607	n2427	n2428	29.76	180	2.445
608	n2428	n2429	29.86	180	2.445
609	n2429	n2430	29.88	180	1.905
610	n2430	n2431	29.87	180	1.905
611	n3266	n2061	32.17	180	2.635
612	n2061	n2062	29.9	180	3.5
613	n2062	n2063	20.99	180	3.37

614	n2063	n2060	29.97	180	2.5
615	n2060	n2059	29.99	180	1.745
616	n2059	n2058	29.98	180	1.325
617	n2058	n2057	28.31	180	1.66
618	n2057	n2056	28.13	180	1.765
619	n2056	n2055	29.89	180	1.255
620	n2055	n2054	29.99	180	1.15
621	n2054	n2053	25.26	180	1.15
622	n2997	n2996	29.64	180	1.825
623	n2996	n2995	29.78	180	1.15
624	n2995	n2994	29.78	180	1.15
625	n2994	n2993	29.82	180	1.15
626	n2993	n2413	41.02	180	1.985
628	n2412	n2411	26.24	180	4.68
629	n2411	n3129	47.06	180	2.48
630	n2413	n2415	34.48	180	2.41
631	n2415	n2416	29.96	180	1.945
632	n2416	n2417	29.97	180	1.945
633	n2417	n2418	29.96	180	1.575
634	n2418	n2423	29.94	180	1.15
635	n2423	n2422	29.93	180	0.875
636	n2422	n2421	29.93	180	0.875
637	n2421	n2420	29.92	180	0.875
638	n2420	n2047	29.26	180	1.14
640	n2043	n2044	29.97	180	1.08
641	n2044	n2045	29.99	180	1.955
642	n2045	n2046	29.45	180	2.205
643	n2036	n2046	31.94	180	1.605
644	n2046	n2052	29.7	180	3.235
645	n2052	n2051	29.93	180	4.75
647	n2050	n2049	29.89	180	1.355
648	n2049	n2048	29.79	180	1.84
649	n2048	n2047	29.94	180	1.9
650	n2047	n2091	27.96	180	1.39
651	n2091	n2092	29.95	180	1.125
652	n2092	n2093	27.45	180	1.15
653	n2093	n2094	28.91	180	1.175
654	n2094	n2095	29.61	180	2.885
655	n3129	n2405	39.86	180	1.715
656	n2403	n2405	36.77	180	3.805
658	n2404	n2408	39.39	180	5.475
659	n2408	n2409	29.87	180	4.26
660	n2409	n2410	29.86	180	3.865
661	n3130	n2169	21.53	180	3.945

662	n2169	n2161	24.83	180	2.27
663	n2146	n2145	25.61	180	1.5
664	n2161	n2162	27.3	180	1.15
665	n2162	n2145	29.85	180	1.15
666	n2147	n2146	29.95	180	1.5
667	n2148	n2150	28.04	180	1.15
668	n2150	n2151	29.88	180	1.625
669	n2151	n2153	24.94	180	1.925
670	n2410	n2153	29.75	180	2.945
671	n2153	n2154	19.92	180	1.45
672	n2154	n2155	29.94	180	1.15
673	n2155	n2157	24.6	180	1.15
674	n2157	n2158	29.77	180	1.15
675	n2158	n2159	29.75	180	1.15
676	n2159	n2160	29.91	180	1.15
677	n2160	n2129	32.01	180	1.15
678	n2108	n2109	29.64	180	1.265
679	n2109	n2110	29.96	180	1.68
680	n2110	n2112	25.2	180	2.795
681	n2112	n2113	29.69	180	4.23
682	n2113	n2114	20.81	180	5.165
683	n2114	n2116	38.41	180	5.49
684	n2116	n2117	29.99	180	5.355
685	n2118	n2120	41.18	180	1.15
686	n2120	n2121	30	180	1.15
687	n2121	n2107	29.87	180	2.92
688	n2106	n2107	29.96	180	2.92
689	n2117	n2107	23.36	180	4.95
691	n2104	n2102	29.85	180	1.66
692	n2102	n2101	29.64	180	2.755
693	n2101	n2100	27.34	180	3.025
694	n3123	n2123	18.9	180	1.485
695	n2123	n2122	29.8	180	2.16
696	n2122	n2100	29.03	180	2.605
697	n2100	n2099	30.67	180	2.76
698	n2099	n2098	29.94	180	2.915
699	n2098	n2097	30.16	180	3.175
700	n2097	n2096	30	180	3.52
701	n2096	n2095	29.56	180	4.14
703	n2095	n2125	29.51	180	4.96
704	n2129	n2128	29.93	250	1.505
705	n2128	n2127	29.97	250	2.015
706	n2131	n2126	39.22	180	2.35
707	n2127	n2126	29.25	250	2.86

708	n2126	n2137	38.95	250	4.59
710	n2190	n2189	13.07	180	1.31
711	n2189	n2188	29.94	180	2.435
712	n2188	n2187	29.93	180	4.34
713	n2136	n2135	20.1	250	1.805
714	n2135	n2133	35.45	250	1.875
715	n2145	n2141	22.04	180	1.15
716	n2141	n2142	15.89	180	1.15
717	n2142	n2143	29.8	180	1.15
718	n2143	n2133	29.67	180	1.22
719	n3262	n3263	19.79	180	2.94
720	n3263	n2187	17.09	180	4.26
721	n2133	n2140	22.81	250	2.275
722	n2140	n2187	29.53	250	4.27
723	n2218	n2217	29.93	180	1.45
724	n2217	n2215	29.7	180	1.45
725	n2215	n2214	22.9	180	2.18
726	n2214	n2213	29.97	180	3.59
727	n2213	n2212	29.84	180	4.41
728	n2212	n2210	26.27	180	5.175
730	n2220	n2221	29.98	180	1.7
731	n2234	n2233	29.99	180	1.15
732	n2233	n2232	29.99	180	1.15
733	n2232	n2231	29.96	180	1.515
734	n2221	n2222	29.72	180	2.07
735	n2222	n2223	29.44	180	2.085
736	n2223	n2231	37.48	180	2.08
737	n2231	n2230	32.9	180	2.45
738	n2230	n2229	29.99	180	2.855
739	n2229	n2228	29.92	180	2.615
740	n2228	n2227	29.89	180	2.515
744	n2167	n2166	29.65	180	3.75
745	n2166	n2165	29.1	180	2.575
746	n2165	n2164	29.33	180	1.15
747	n2164	n2163	29.65	180	1.15
748	n2234	n2209	25.23	180	2.59
749	n2209	n2208	28.5	180	2.59
750	n2208	n2207	29.98	180	1.795
751	n2207	n2206	29.52	180	2.565
753	n2206	n2203	41.02	180	2.9
756	n2200	n2199	25.19	180	2.365
757	n2227	n2226	17.47	180	2.655
758	n2226	n2225	11.91	180	2.86
759	n2225	n2199	18.26	180	3.24

761	n2199	n2198	29.64	180	3.775
762	n2198	n2197	29.97	180	4.095
763	n2203	n2204	29.99	180	3.2
764	n2204	n3261	14.06	180	3.465
765	n3261	n2196	20	180	4.95
766	n3132	n3007	13.91	180	1.39
767	n3007	n3008	22.72	180	2.195
768	n2197	n2193	15.56	180	4.5
769	n3008	n2193	30	180	3.77
770	n2193	n2194	19.79	180	4.905
771	n2194	n2195	29.9	180	5.25
772	n2195	n2196	30.73	180	5.865
773	n2187	n2185	38.55	250	5.145
774	n2185	n2184	29.91	250	4.96
775	n2184	n2182	32.35	250	5.975
776	n2196	n2182	34.16	180	6.65
778	n2180	n2179	29.99	250	1.315
779	n2179	n2178	29.99	250	1.65
780	n2178	n2173	30.1	250	2.115
781	n2144	n2175	44.19	180	3.32
782	n2175	n2174	29.83	180	4.125
783	n2174	n2173	29.88	180	3.26
784	n2177	n2175	28.92	180	3.625
785	n2173	n2171	24.5	250	2.045
786	n2171	n2170	29.02	250	1.63
787	n2170	n2163	29.82	250	1.365
788	n2237	n2236	30	180	1.16
789	n2236	n2235	30	180	1.45
790	n2163	n2235	32.91	250	1.44
791	n2235	n2239	29.99	250	1.85
792	n2239	n2238	29.72	250	2.235
793	n2238	n1473	24.82	250	2.52
794	n1490	n1488	25.36	180	1.22
795	n1488	n1487	22.76	180	1.18
796	n1487	n1486	29.95	180	1.15
797	n1486	n1485	29.97	180	1.165
798	n1485	n1484	29.99	180	1.145
799	n1484	n1482	29.6	180	1.13
800	n1482	n1481	29.98	180	1.655
801	n1467	n1465	41.58	250	1.255
802	n1465	n1463	41.81	250	1.255
805	n1473	n1472	29.69	250	3.305
806	n1472	n1471	29.41	250	4.07
807	n1471	n1470	28.57	250	3.99

808	n1470	n1469	28.47	250	4.205
809	n1456	n1457	29.99	180	1.28
810	n1457	n1458	29.58	180	1.63
811	n1458	n1460	39.45	180	2.055
812	n1460	n1461	19.45	180	3.615
813	n1452	n1454	47.5	180	2.735
814	n1454	n1462	49.89	180	5.29
815	n1461	n1462	29.76	180	6.17
818	n1463	n1442	27.71	250	1.15
819	n1442	n3251	19.66	300	1.15
820	n1440	n1450	32.8	300	1.15
821	n1450	n1449	29.99	300	1.265
822	n1449	n1448	29.92	300	2.89
823	n1375	26	30	180	1.2
825	n1714	16	10	180	6.57
826	n1993	17	15	180	6.97
827	n2004	27	10	180	6.83
828	n2015	28	15	180	6.96
829	n1673	29	20	180	6.99
830	n1607	30	15	180	5.79
831	n1671	31	20	180	3.87
832	n2037	32	20	180	4.92
833	n2051	33	20	180	5.14
834	n1536	34	20	180	3.5
835	n1531	35	20	180	3.26
836	n2053	n2036	30	180	1.15
837	n2125	36	20	180	5.4
838	n2107	37	20	180	4.74
839	n2137	38	20	250	4.64
841	n1469	40	20	250	4.255
842	n1462	41	20	180	4.415
843	n2210	42	20	180	5.55
844	n2182	43	20	250	7.09
846	n1418	n2272	30	180	1.15
849	n2202	n2200	33.1	180	1.15
850	n2412	45	10	180	4.8
851	n2565	n2564	16.45	180	1.15
53	n1443	n2589	27.24	300	1.15
121	n1051	1	12.99	300	5.62

ANNEXURE A.2

NETWORK DETAILS IN ZONE 3					
PIPE NO	Start Node	End node	Length	Diameter	Average depth
1	n6	n7	23.81	180	1
2	n7	n8	29.97	180	1
3	n8	n9	29.99	180	1
4	n9	n10	29.92	180	1
5	n10	n11	25.6	180	1
6	n11	n12	29.92	180	3.195
8	n900	n898	29.94	180	1.91
9	n901	n898	16.04	180	1.91
10	n897	n896	29.92	180	1.275
11	n898	n896	16.65	180	2.185
14	n18	n19	30	180	1
15	n19	n20	29.99	180	1.275
16	n20	n21	30	180	1.275
17	n21	n22	30	180	1.25
18	n22	n555	37.1	180	1.465
19	n555	n556	29.98	180	1.215
20	n556	n557	29.97	180	1
21	n557	n558	29.97	180	1
22	n558	n559	29.99	180	1
23	n559	n560	30	180	1.105
24	n560	n561	30	180	1.375
25	n561	n562	30	180	1.82
26	n562	n563	29.99	180	2.485
27	n563	n564	29.93	180	3.265
28	n3232	n38	35.01	180	1
30	n38	n37	16.86	180	1.035
31	n37	n36	29.81	180	1.035
32	n36	n35	29.94	180	1
33	n35	n30	53.3	180	1
34	n33	n30	36.22	180	1
35	n30	n29	16.79	180	1.645
36	n29	n28	23.18	180	1.645
38	n26	n25	29.93	180	3.23
39	n25	n24	29.98	180	2.84
40	n24	n23	29.94	180	1.915
41	n23	n22	29.98	180	1.46
43	n40	n41	28.06	180	1.23
44	n41	n42	29.44	180	1.195
45	n42	n43	29.97	180	1.565

47	n543	n542	29.97	180	1.275
49	n553	n552	29.99	180	1
50	n552	n551	29.89	180	1
51	n551	n550	29.51	180	1
52	n550	n549	29.84	180	1
53	n549	n548	30	180	1
54	n548	n547	29.73	180	0.8
55	n547	n546	30	180	0.8
56	n546	n560	38.69	180	1.105
57	n103	n101	35.19	180	1
58	n101	n98	29.76	180	2.36
59	n100	n99	29.94	180	2.025
60	n99	n98	11.13	180	3.385
61	n98	n97	8.6	180	3.495
62	n96	n95	29.99	180	1.59
63	n95	n94	16.11	180	2.25
64	n97	n94	29.89	180	2.795
65	n94	n93	28.69	180	1.66
66	n93	n92	29.8	180	1
67	n92	n91	29.79	180	1
68	n91	n90	29.98	180	1
69	n90	n89	36.65	180	1.405
70	n89	n88	17.25	180	1.525
71	n88	n87	23.37	180	1.455
72	n87	n86	34.29	180	1.885
73	n86	n85	25.72	180	2.185
74	n85	n83	30.79	180	2.32
75	n532	n531	35.08	180	1
76	n531	n530	29.43	180	1
77	n530	n529	29.98	180	1
78	n529	n528	26.76	180	1
79	n535	n3236	29.92	180	1
80	n3236	n539	38.33	180	1.08
81	n539	n538	29.9	180	1.08
82	n538	n537	29.9	180	1
83	n537	n536	29.98	180	1
84	n536	n540	29.87	180	1
85	n540	n542	33.74	180	1.275
86	n83	n82	29.41	180	2.04
87	n82	n81	30.63	180	1.425
88	n81	n80	29.62	180	1.07
89	n80	n79	14.8	180	1
90	n79	n78	15.95	180	66.5
91	n78	n77	12.16	180	66.775

92	n77	n76	17.51	180	1.545
93	n76	n75	29.98	180	1.77
94	n75	n73	28.48	180	1.785
95	n74	n73	34.51	180	1.285
96	n73	n70	20.27	180	1.285
97	n70	n69	29.16	180	1
98	n69	n68	34.75	180	1
99	n68	n225	29.03	180	1
100	n225	n66	32.8	180	1.215
101	n55	n56	29.99	180	1.43
102	n56	n57	29.98	180	2.425
103	n57	n63	33.39	180	3.145
104	n63	n64	29.98	180	2.945
105	n64	n65	28.45	180	2.695
106	n65	n66	24.74	180	2.115
108	n52	n51	29.99	180	1
109	n51	n50	29.99	180	1
110	n50	n49	30	180	1
111	n49	n48	29.99	180	1
112	n48	n46	27.67	180	1
113	n46	n45	30	180	1
114	n45	n3233	20	180	1
115	n3233	n44	11.15	180	1
116	n44	n43	18.86	180	1.465
117	n66	n223	16.07	180	1.325
118	n223	n228	14.69	180	1.61
119	n228	n261	30.93	180	1.665
120	n3135	n735	26.1	180	1
121	n735	n734	29.99	180	1
122	n734	n733	29.99	180	1
123	n733	n732	29.99	180	1
124	n732	n731	29.99	180	1
125	n731	n730	29.99	180	1
126	n730	n729	29.99	180	1
127	n729	n728	29.99	180	1
128	n728	n727	30	180	1
129	n727	n867	25.97	180	1.1
130	n867	n866	30	180	1.3
131	n866	n865	30	180	1.565
132	n865	n864	30	180	1.87
133	n864	n863	30	180	2.355
134	n863	n858	30	180	2.805
135	n261	n260	29.75	180	1.265
136	n260	n259	29.98	180	1.1

137	n259	n258	29.97	180	1
138	n255	n256	12.54	180	1
139	n256	n257	29.95	180	1
140	n257	n258	29.94	180	1
141	n266	n264	29.71	180	1
142	n264	n263	11.5	180	1
143	n263	n262	27.41	180	1
144	n258	n262	15.01	180	1
145	n262	n272	30.87	180	1
146	n272	n271	29.95	180	1
147	n271	n270	29.49	180	1
148	n254	n83	17.07	180	1.685
149	n253	n254	29.99	180	1.125
150	n896	n893	35.2	180	1.97
151	n894	n893	26.32	180	1.495
152	n893	n892	29.96	180	2.235
153	n892	n891	29.83	180	1.63
154	n891	n890	29.67	180	1.09
155	n890	n889	29.78	180	0.8
156	n3255	n888	40.32	180	1.2
157	n889	n888	25.88	180	1
158	n888	n887	38.65	180	1.365
159	n887	n886	29.97	180	1.36
160	n886	n3257	29.79	180	1.41
161	n3257	n885	30.21	180	1.445
162	n885	n884	29.99	180	1.465
163	n884	n3258	30	180	1.52
164	n3258	n883	30	180	1.52
165	n883	n882	29.97	180	1.415
166	n882	n881	29.98	180	1.18
167	n881	n880	29.99	180	1
168	n880	n879	29.98	180	1.2
169	n879	n878	30	180	1.2
170	n878	n877	29.89	180	1.1
171	n877	n876	29.98	180	1.3
172	n876	n875	30	180	1.88
173	n875	n874	29.99	180	2.68
174	n874	n873	30	180	3.265
175	n873	n872	30	180	3.82
176	n872	n871	29.99	180	4.145
177	n871	n870	30	180	4.15
178	n870	n869	29.96	180	3.785
179	n869	n868	29.9	180	2.715
180	n868	n813	29.91	180	1.49

182	n858	n857	20.42	180	3.01
183	n534	n535	29.93	180	1
184	n533	n528	29.89	180	1
185	n528	n527	30.81	180	1
186	n527	n525	54.28	180	1
187	n525	n524	29.06	180	1
188	n524	n523	29.6	180	1
189	n523	n517	28.73	180	1
190	n522	n521	22.38	180	1
191	n521	n519	24.26	180	1
192	n519	n518	30	180	1
193	n518	n517	28.3	180	1
194	n517	n516	21.9	180	1
195	n516	n515	23.03	180	1
196	n437	n436	16.7	180	1
197	n436	n435	24.02	180	1.265
198	n435	n434	23.15	180	1.515
199	n434	n433	29.18	180	1.25
200	n433	n432	24.82	180	1
201	n432	n431	16.46	180	1
202	n431	n430	29.96	180	1.05
203	n430	n539	24.26	180	1.13
204	n446	n3064	13.81	180	2.375
205	n453	n452	25.01	180	1
206	n452	n449	25.4	180	1
207	n442	n448	20.3	180	1.43
208	n448	n446	26.41	180	2.57
209	n3064	n433	20.78	180	1.235
210	n449	n446	22.36	180	2.14
211	n5	n4	22.07	180	1
212	n4	n3	25.04	180	1
213	n3	n443	17.57	180	1
214	n443	n442	29.85	180	1
215	n1	n5	27.15	180	1
216	n2	n1	19.73	180	2.925
218	n455	n456	15.23	180	1.225
219	n456	n457	29.87	180	1.65
220	n457	n458	16.36	180	1.755
221	n458	n459	11.96	180	1.33
222	n459	n460	29.81	180	1
223	n460	n461	29.83	180	1
224	n461	n462	29.92	180	1
225	n462	n463	21.85	180	1
226	n463	n465	33.19	180	1

227	n465	n467	34.22	180	1
228	n467	n468	10.47	180	0.8
229	n468	n469	21.06	180	1
230	n469	n470	10.45	180	2.72
231	n472	n471	29.91	250	3.7
232	n473	n472	29.45	250	2.485
235	n471	n470	30.27	250	4.515
236	n490	n489	31.58	180	1
237	n489	n492	22.47	180	1.05
240	n252	n251	26.37	180	1
241	n251	n250	29.92	180	1.405
242	n250	n244	29.84	180	1.73
243	n244	n241	29.95	180	2.07
244	n243	n242	22.59	180	1
245	n242	n241	29.83	180	1.745
246	n241	n240	29.9	180	2.835
247	n240	n239	29.99	180	3.54
248	n239	n238	29.99	180	4.19
249	n238	n236	20.09	180	4.18
250	n236	n235	34.15	180	2.44
251	n235	n234	29.79	180	1.11
252	n3081	n233	24.08	180	1
253	n233	n234	28.71	180	1.11
254	n234	n232	8.59	180	1.18
255	n232	n231	29.92	180	1.15
256	n231	n230	28.51	180	1.13
257	n230	n261	31.24	180	1.215
258	n284	n283	30	180	1.13
259	n283	n282	29.95	180	1.13
260	n282	n281	14.15	180	1
261	n281	n280	29.91	180	1
262	n492	n493	29.99	180	1.05
263	n493	n494	29.99	180	1
264	n494	n495	29.99	180	1
265	n495	n496	30	180	1.1
266	n496	n3241	29.99	180	1.58
267	n3241	n279	29.61	180	1.945
268	n280	n279	29.79	180	1.465
269	n279	n278	12.08	180	2.275
270	n278	n277	29.97	180	2.095
271	n277	n276	29.97	180	1.595
272	n276	n275	29.98	180	1.31
273	n275	n274	29.96	180	1
274	n274	n270	28.93	180	1

275	n3086	n511	36.53	180	1.65
276	n511	n509	34.73	180	2.765
277	n509	n508	26.21	180	2.91
278	n508	n507	29.94	180	2.725
279	n503	n505	39.77	180	1.5
280	n505	n506	19.28	180	2.07
281	n506	n507	25.76	180	2.5
282	n501	n507	42.05	180	1.93
283	n507	n499	45.03	180	3.305
284	n499	n498	29.98	180	4.335
286	2	n473	17.66	250	1.58
287	n564	n565	29.91	180	4
290	n585	n584	29.91	180	1
291	n584	n583	29.99	180	1
292	n583	n582	29.99	180	1
293	n582	n581	28.23	180	1.615
294	n580	n579	29.98	180	1
295	n579	n578	29.97	180	1
296	n578	n577	29.98	180	1
297	n577	n573	24.21	180	2.48
298	n573	n572	22.68	180	3.96
299	n576	n575	29.98	180	1
300	n575	n571	38.24	180	2.335
301	n572	n571	29.99	180	3.815
302	n571	n570	29.99	180	4.085
303	n570	n569	29.99	180	4.2
304	n569	n568	29.78	180	3.005
305	n581	n573	26.12	180	3.095
306	n565	3	23.01	180	4.545
307	n568	3	36.57	180	3.43
308	3	LS-2(4.95m)	14.96	180	4.85
309	n270	4	12.3	180	2.875
310	n498	4	27.43	180	4.835
311	4	LS-1(4.75m)	12.6	180	4.75
312	n3234	n3235	20	180	1.15
313	n3235	n596	29.67	180	1.515
314	n596	n597	29.94	180	1.87
315	n597	n598	29.96	180	2.11
316	n598	n599	29.98	180	2.08
317	n599	n600	29.98	180	1.85
318	n600	n601	30	180	1.75
319	n601	n594	30	180	1.85
320	n594	n603	38.65	180	2.44
321	n603	n604	30	180	3.24

322	n604	n605	29.99	180	3.67
323	n605	n606	29.99	180	3.87
324	n606	n612	36.6	180	2.675
325	n612	n613	29.99	180	1.31
326	n613	n614	30	180	1.3
327	n614	n615	29.99	180	1.19
328	n615	n616	29.98	180	1
329	n474	n475	29.87	250	1
331	n624	n623	19.72	250	3.03
332	n623	n621	12.95	250	2.02
333	n621	n620	15.08	250	1.405
334	n620	n619	29.97	250	1.145
335	n619	n618	29.99	250	1
336	n618	n617	29.57	250	1
337	n617	n616	29.97	250	0.8
338	n616	n633	28.8	250	1
339	n633	n632	29.64	250	1
340	n632	n635	25.4	250	1
341	n635	n634	29.98	250	2
343	n608	n609	30	180	1.17
344	n609	n610	30	180	1.17
345	n610	n513	29.98	180	1.475
346	n513	n514	25.73	180	2.51
347	n515	n513	29.3	180	1.62
348	n514	n625	41.34	180	3.15
349	n625	n624	29.99	250	3.53
351	n643	n642	29.87	180	1
352	n642	n641	28.65	180	1
353	n641	n640	8.94	180	1
354	n640	n639	20.26	180	1
355	n639	n638	30	180	1
356	n638	n637	30	180	1.1
357	n637	n636	30	180	1.485
358	n129	n127	39.38	180	1.725
359	n127	n126	29.92	180	1
360	n126	n119	29.91	180	1.695
361	n311	n312	15.4	180	1
362	n312	n313	28.56	180	1
363	n314	n315	29.94	180	1
364	n315	n316	13.99	180	1
365	n316	n317	15.77	180	1.1
366	n317	n318	38.34	180	1.1
367	n313	n318	29.62	180	1
368	n318	n319	21.6	180	1

369	n319	n320	28.75	180	1
370	n320	n321	30.24	180	1
371	n321	n322	29.95	180	1
372	n322	n88	29.64	180	1.12
374	n324	n325	30.06	180	1.32
375	n325	n326	29.92	180	1.62
376	n326	n327	29.65	180	1.3
377	n327	n329	34.85	180	1
378	n329	n332	20.5	180	1
379	n332	n333	29.7	180	1.51
380	n333	n334	29.98	180	2.55
381	n334	n335	29.98	180	3.7
382	n335	n304	29.94	180	4.785
383	n304	n336	29.54	180	5.48
384	n310	n311	18.79	180	1
385	n309	n310	21.32	180	1
386	n307	n309	29.68	180	1
387	n306	n305	29.82	180	1
388	n305	n297	16.32	180	1
389	n299	n300	25.74	180	1
390	n300	n301	7.34	180	1
391	n301	n298	21.17	180	1
392	n291	n292	29.91	180	1.16
393	n292	n289	30.16	180	1.16
394	n289	n293	30	180	1.155
395	n293	n294	29.53	180	1.155
396	n294	n297	36.69	180	1
397	n288	n287	29.79	180	1.465
398	n3273	n3274	29.94	180	1.45
399	n3274	n286	20.09	180	2.18
400	n286	n285	29.6	180	1.73
401	n285	n236	11.14	180	2.44
402	n287	n286	16.95	180	2.195
403	n3084	n420	29.97	180	1
404	n420	n419	29.98	180	1
405	n419	n418	29.97	180	1
406	n418	n282	29.15	180	1
407	n297	n298	37.88	180	1
408	n298	n302	29.17	180	1
409	n302	n303	29.93	180	1
410	n303	n304	25.91	180	3.125
411	n340	n341	29.58	180	1
412	n341	n342	29.73	180	1
413	n342	n343	13.06	180	1

414	n343	n347	16.36	180	1
415	n347	n348	29.92	180	1
416	n348	n349	27.49	180	1
417	n349	n352	35.94	180	1
418	n352	n354	38.86	180	1.635
419	n354	n355	20.76	180	2.345
420	n358	n355	28.4	180	1.71
421	n355	n357	28.39	180	2.91
422	n415	n416	15.27	180	1
423	n416	n417	13.97	180	1
424	n417	n356	29.27	180	2.56
425	n357	n356	29.94	180	3.76
426	n337	n336	29.98	180	3.355
427	n338	n337	15.12	180	1
428	n339	n338	29.59	180	1
429	n336	LS-3(5.71)	1	180	2.8575
430	n412	n411	29.93	180	1
431	n411	n410	29.91	180	1
432	n409	n410	29.9	180	1
433	n408	n409	29.77	180	1.84
434	n410	n415	39.67	180	1
435	n402	n403	30	180	1.305
436	n403	n404	19.24	180	1.935
437	n404	n405	9.9	180	2.325
438	n405	n406	29.97	180	1.865
439	n406	n407	29.95	180	1.17
440	n407	n408	29.98	180	1.84
441	n356	LS-4	12.93	180	2.0625
442	n359	n360	29.99	180	1
443	n360	n361	29.99	180	1
444	n361	n368	37.66	180	1
445	n368	n369	29.98	180	1
446	n369	n370	28.18	180	1.1
447	n370	n372	37.32	180	1.35
448	n379	n378	18.9	180	1
449	n378	n377	29.96	180	1
450	n377	n376	29.96	180	1
451	n372	n373	29.98	180	1.75
452	n376	n373	29.95	180	1.5
453	n373	n374	13.44	180	2.175
454	n380	n375	27.56	180	1.72
455	n374	n375	29.9	180	2.395
456	n375	n381	29.54	180	2.525
457	n381	n382	29.99	180	2.865

458	n382	n383	29.96	180	3.43
459	n386	n385	20.5	180	1
460	n385	n384	29.57	180	2.67
461	n383	n384	22.07	180	4.04
462	n401	n400	28.48	180	1
463	n400	n399	29.91	180	1.205
464	n399	n398	17.97	180	1.63
465	n398	n397	11.24	180	1.97
466	n397	n396	8.14	180	2.045
467	n396	n395	12.89	180	1.995
468	n395	n394	16.57	180	2.495
469	n394	n393	29.98	180	2
470	n393	n392	8.25	180	1
471	n392	n391	21.56	180	1
472	n391	n390	8.87	180	0.8
475	n3242	n388	29.98	180	1.375
476	n390	n388	17.62	180	1.175
477	n3085	n427	19.85	180	1
478	n427	n426	29.67	180	1
479	n426	n425	29.89	180	1
480	n388	n425	44.69	180	1.375
481	n425	n424	29.94	180	1
482	n424	n423	29.97	180	1.05
483	n423	n422	30	180	1.05
484	n422	n279	32.8	180	1.465
485	n213	n214	13.42	180	1
486	n214	n215	18.62	180	1
487	n215	n216	28.02	180	1.185
488	n216	n217	29.98	180	1.63
489	n217	n218	14.23	180	2.03
490	n218	n219	15.01	180	2.42
491	n219	n220	10.36	180	2.92
492	n220	n221	19.02	180	3.605
493	n221	n222	29.98	180	4.625
494	n12	LS-6	8.7	180	5.44
495	n222	n12	29.99	180	5.3
496	n13	n14	29.97	180	1
497	n14	n15	29.94	180	1
498	n15	n16	29.99	180	1
499	n16	n212	30	180	1
500	n212	n211	29.95	180	1.19
501	n211	n210	29.89	180	1.665
502	n210	n209	29.99	180	1.95
503	n209	n208	28.91	180	2.775

504	n208	n193	17.37	180	4.005
505	n204	n205	15.65	180	1
506	n205	n206	29.97	180	1
507	n206	n207	29.95	180	1.225
508	n207	n203	29.98	180	1.69
509	n203	n202	28.2	180	2.4
510	n202	n201	29.63	180	4.335
511	n201	n200	21.62	180	6.48
512	n200	n198	37.71	180	6.265
513	n198	n197	29.91	180	4.59
514	n197	n193	29.96	180	4.11
515	n193	LS-7	13.39	180	2.2075
516	n154	n155	9.06	180	1
517	n155	n156	28.83	180	1
519	n173	n174	29.95	180	1.145
520	n174	n179	15.44	180	1.045
521	n179	n177	18.2	180	1
522	n177	n176	22.63	180	1
523	n181	n180	29.97	180	1
524	n180	n175	29.7	180	1
525	n176	n175	29.98	180	1
526	n175	n186	29.65	180	1
527	n186	n185	29.35	180	1
528	n185	n184	29.99	180	1
529	n184	n183	30	180	1
530	n194	n195	29.99	180	1.275
531	n195	n196	30	180	1.54
532	n196	n168	30.32	180	1.61
533	n156	n171	9.29	180	1
534	n171	n170	29.99	180	1
535	n170	n169	30	180	1
536	n169	n168	29.99	180	1.345
537	n168	n166	32.17	180	1.88
538	n166	n165	29.99	180	2.28
539	n165	n164	30	180	2.735
540	n164	n163	30	180	2.915
541	n163	n162	29.72	180	2.85
542	n162	n161	29.92	180	2.625
543	n161	n160	29.92	180	2.055
544	n160	n159	29.85	180	1.355
545	n159	n158	29.81	180	1
546	n158	n187	28.39	180	1.05
547	n187	n188	30	180	1.295
548	n183	n182	12.43	180	1.415

549	n188	n182	16.99	180	1.66
550	n182	n189	10.89	180	2.045
551	n189	n190	29.9	180	2.615
552	n190	n191	29.88	180	3.42
554	n153	n152	29.96	180	1
555	n152	n151	29.98	180	1
556	n151	n150	30	180	1
558	n150	n148	39.16	180	1.71
559	n148	n147	30.26	180	2.87
560	n147	n146	29.97	180	3.61
561	n146	n145	29.9	180	3.45
562	n191	n144	27.58	180	4.73
563	n145	n144	29.64	180	4.295
564	n144	LS-8	8.59	180	5.64
565	n143	n142	29.83	180	1.155
566	n142	n141	29.98	180	1.445
567	n141	n140	29.98	180	1.45
568	n140	n137	17.59	180	1.505
569	n138	n137	10.69	180	1.345
570	n137	n136	29.11	180	2.695
571	n3079	n134	21.03	180	1.205
572	n134	n135	8.86	180	1.55
573	n135	n136	29	180	2.695
574	n136	n133	17.54	180	3.82
575	n133	n132	17.21	180	4.35
576	n132	LS-9	10.83	180	2.3825
577	n131	n130	29.85	180	1.6
578	n130	n129	20.48	180	2.325
579	n121	n120	29.22	180	1.3
580	n120	n119	29.98	180	1.995
581	n119	n118	20.24	180	2.35
582	n118	n117	29.92	180	1.925
583	n117	n116	29.98	180	1.495
584	n116	n115	29.9	180	1.525
585	n115	n114	29.61	180	1.515
586	n114	n113	29.81	180	1.48
587	n113	n112	30	180	1.725
588	n112	n111	29.99	180	2.01
589	n111	n110	30	180	2.25
590	n110	n109	29.63	180	2.615
591	n109	n108	29.74	180	3.055
592	n108	n107	29.92	180	3.51
593	n3038	n3037	7.55	180	1
594	n3037	n3036	22.42	180	1

595	n3036	n3035	29.02	180	0.8
596	n3035	n3034	10.93	180	0.6
597	n3034	n3033	18.97	180	0.925
598	n107	n106	29.94	180	3.9
599	n3033	n106	22.41	180	2.655
600	n106	n104	22.59	180	4.345
601	n104	LS-10	22.63	180	4.68
602	n634	n647	28.03	250	3
603	n647	n646	29.99	250	3.045
604	n646	n645	30	250	3.145
605	n645	n644	29.69	250	3.315
606	n2670	n2672	18.68	250	2.93
607	n2669	n2670	29.99	250	3.26
608	n644	n2669	26.61	250	3.37
609	n714	n718	18.22	180	1.17
610	n718	n719	30	180	1.355
611	n719	n720	29.99	180	1.285
612	n720	n721	29.98	180	1.1
613	n721	n722	29.95	180	1
614	n722	n723	29.97	180	1
615	n723	n724	29.98	180	1
616	n724	n725	29.97	180	1
617	n725	n726	29.96	180	1.1
618	n738	n737	29.99	180	1
619	n737	n736	29.99	180	1.085
620	n736	n739	23.11	180	1.195
621	n739	n743	34.59	180	1.11
622	n743	n744	30	180	1
623	n744	n726	29.96	180	1.1
624	n813	n812	21.63	180	1
625	n3051	n3050	29.94	180	1.6
626	n3050	n3048	15.71	180	2.24
627	n3048	n3049	28.54	180	3.11
628	n3047	n3046	20.26	180	2.515
629	n3049	n3046	29.67	180	3.985
630	n3046	n3044	23.28	180	4.175
631	n3044	n3043	23.76	180	3.82
632	n3043	n3042	29.95	180	2.55
633	n3042	n3041	29.92	180	1.39
634	n726	n746	9.57	180	1.49
635	n746	n745	29.97	180	1.99
636	n3041	n749	29.94	180	1
637	n749	n750	22.64	180	1.15
638	n750	n751	29.99	180	1.4

639	n751	n752	29.99	180	1.645
640	n752	n745	29.99	180	1.995
641	n745	n747	31.34	180	1.75
642	n3253	n3252	19.47	180	1.065
643	n3252	n747	17.54	180	1.215
644	n747	n838	27.1	180	1.225
645	n838	n837	29.91	180	1.075
646	n837	n836	29.99	180	1
647	n836	n835	25.26	180	1
648	n835	n833	34.48	180	1.07
649	n833	n775	29.86	180	1.295
650	n859	n858	29.41	180	1.955
651	n860	n861	21.28	180	1
652	n861	n3138	23.68	180	1
653	n3138	n862	22.06	180	1.155
654	n862	n3253	62.69	180	1.155
655	n857	n853	30	180	3.17
656	n856	n3138	33.97	180	1
657	n855	n856	25.96	180	1
658	n854	n853	29.46	180	2.115
659	n853	n852	23.83	180	3.335
660	n852	n847	30	180	4.59
661	n850	n849	29.94	180	1.49
662	n849	n848	29.57	180	3.19
663	n848	n847	29.78	180	5.07
664	n847	LS-17	22.31	180	5.79
665	n636	n634	29.93	180	2.385
666	n628	n626	52.51	180	1
667	n626	n648	29.95	180	1
668	n648	n649	29.96	180	1
669	n649	n650	29.61	180	1
670	n650	n651	29.78	180	1
671	n651	n652	29.99	180	1
672	n652	n653	29.99	180	1
673	n653	n654	29.96	180	1
674	n654	n655	19.64	180	1
675	n655	n657	38.02	180	1
676	n657	n658	30	180	1
677	n658	n659	29.96	180	1
678	n659	n660	25	180	1.08
679	n660	n661	14.07	180	1.18
681	n2683	n2682	29.96	180	1.04
682	n2682	n2681	30	180	1.12
683	n2681	n2680	30	180	1.155

684	n2680	n2679	29.69	180	1.135
685	n661	n662	29.99	180	1.28
686	n2679	n2678	15.03	180	1.185
687	n2678	n2677	14.94	180	1.305
688	n2677	n2676	29.95	180	1.355
689	n2676	n2675	29.95	180	1.37
690	n2675	n2674	21.58	180	1.44
691	n2674	n2685	39.59	250	1.575
692	n2685	n2684	29.96	250	1.73
693	n2684	n2695	29.91	250	1.935
694	n2695	n2694	29.05	250	2.09
695	n2694	n2693	29.91	250	2.175
696	n2693	n2692	29.49	250	2.24
697	n2692	n2691	29.99	250	2.395
698	n2691	n2690	29.99	250	2.51
699	n2690	n2689	30	250	2.505
700	n2689	n2688	30	250	2.585
701	n2688	n2687	29.87	250	2.665
702	n2687	n2801	34.74	250	2.775
703	n2801	n2800	29.59	250	3.015
704	n2800	n2799	29.88	250	3.205
705	n2799	n2798	29.82	250	3.3
706	n2798	n2797	29.99	250	3.39
707	n2797	n2796	29.67	250	3.37
708	n2796	n2795	26.85	250	3.37
709	n2795	n2794	30	300	3.455
710	n2794	n2793	30	300	3.46
711	n2793	n2792	29.89	300	3.44
712	n2792	n2791	30	300	3.49
713	n2791	n2790	29.93	300	3.585
714	n2790	n2789	29.8	300	3.7
715	n2789	n2788	29.29	300	3.89
716	n2869	n2842	12.86	180	1
717	n2875	n2869	29.47	180	1
718	n2876	n2875	29.89	180	1
719	n2877	n2876	30	180	1
720	n2878	n2879	30	180	0.8
721	n2879	n2881	25.32	180	1
722	n2881	n2882	32.53	180	0.905
723	n2882	n2862	13.17	180	1.19
724	n2862	n2864	33.72	180	1.085
725	n2864	n2865	29.99	180	1
726	n2865	n2867	27.41	180	1.26
727	n2867	n2868	29.73	180	2.18

728	n2668	n644	29.38	180	2.215
729	n2667	n2668	29.87	180	1
730	n2843	n2844	29.97	180	1
731	n2844	n3245	35.12	180	1
732	n3245	n3243	32.33	180	1
733	n3243	n3069	27.19	180	1
734	n3069	n2846	29.98	180	1
735	n2846	n2831	29.67	180	1.23
736	n2874	n2873	25.45	180	1
737	n2873	n2871	27.85	180	1
738	n2871	n2870	29.77	180	1
739	n2870	n3180	29.91	180	1
740	n3180	n3068	18.91	180	1
741	n3068	n2837	12.83	180	1
742	n2837	n2838	29.94	180	1
743	n2838	n2839	29.54	180	1
744	n2839	n2840	27.99	180	1
745	n2840	n2841	29.86	180	1.185
746	n2841	n2831	29.97	180	1.415
747	n2665	n2666	29.98	180	1
748	n2664	n2665	29.98	180	1
749	n2663	n2664	28.75	180	1
750	n2868	n2857	29.29	180	2.825
751	n2672	n2674	39.51	250	2.07
752	n2860	n2861	29.99	180	1
753	n2861	n2662	29.75	180	1
754	n2662	n2663	29.95	180	1
755	n2666	n2667	29.91	180	1
756	n662	n663	30	180	1.445
757	n663	n664	29.98	180	1.69
758	n664	n665	30	180	2.07
759	n665	n666	30	180	2.65
760	n666	n667	29.95	180	3.64
761	n667	n668	29.94	180	4.985
762	n668	LS-11	22.12	180	2.925
763	n2536	n3157	27.4	180	1.295
764	n3157	n676	39.91	180	1.295
765	n676	n675	26.49	180	1
766	n675	n674	29.99	180	1
767	n674	n672	32.13	180	1
768	n672	n671	29.94	180	1
769	n671	n670	29.95	180	1
770	n670	n669	30	180	1
771	n669	n668	29.99	180	3.35

772	n2539	n2536	25.25	180	1
773	n775	n832	21.7	180	2
774	n832	n831	29.99	180	2.875
775	n831	n830	29.98	180	3.66
776	n830	n829	24.33	180	4.54
777	n2315	n2316	30	180	1.265
778	n680	n679	28.54	180	1
779	n679	n677	26.87	180	1
780	n677	n674	36.34	180	1
781	n2316	n2317	30	180	1.76
782	n2317	n2321	42.85	180	2.46
783	n2321	n2322	30	180	3.26
784	n2322	n2323	29.99	180	3.9
785	n2323	n2324	30	180	4.495
786	n2324	LS-12	13.88	180	4.83
787	n2325	n2326	30	180	1.19
788	n2326	n2327	29.98	180	1.53
789	n2327	n2328	30	180	1.855
790	n2328	n2329	29.89	180	1.975
791	n2329	n1085	29.92	180	1.695
792	n1085	n1083	32.96	350	1.235
793	n1083	n1082	29.95	350	1
794	n1082	n1081	29.99	350	1
795	n1081	n1080	29.99	350	1
796	n1080	n1079	29.99	350	1
797	n1079	n1078	22.36	350	1
798	n1078	n1077	30	350	1
799	n1077	n1076	30	350	1
800	n1076	n1075	29.97	350	1
801	n1075	n1074	29.48	350	1.045
802	n1074	n1073	29.99	350	1.09
803	n1073	n1072	29.99	350	1.19
804	n1072	n3170	26.09	350	1.485
805	n3170	n1060	33.67	350	1.535
806	n1060	n1059	18.78	350	1.275
807	n1059	n1058	29.99	350	1.08
808	n1058	n1057	29.93	350	1
809	n1057	n3249	20	350	1
810	n3249	n1049	39.98	400	1
811	n1049	n1048	29.75	400	1.25
813	n2831	n2832	10.72	180	1.52
814	n2832	n2833	22.71	180	1.895
815	n2833	n2835	36.28	180	2.58
816	n2835	n2836	29.99	180	3.125

817	n2836	n2822	29.98	180	3.28
818	n2857	n2858	24.94	180	2.74
819	n2858	n2859	29.88	180	2.535
820	n2859	n2856	29.83	180	2.405
821	n2856	n2855	18.88	180	2.48
822	n2855	n2854	11.02	180	2.755
823	n2854	n2853	29.68	180	3.505
824	n2853	n2848	29.95	180	3.925
825	n3176	n3175	29.7	180	1.1
826	n3175	n3174	9.48	180	1.2
827	n3174	n3173	20.18	180	1.905
828	n3173	n3172	29.66	180	2.925
829	n3172	n2848	28.77	180	3.52
830	n2848	n2849	22.02	180	3.905
831	n2849	n2850	29.98	180	4.415
832	n2850	n2851	29.99	180	4.77
833	n2851	n2852	24.11	180	4.53
834	n2818	n2852	43.25	180	2.67
835	n2852	n2805	38.28	180	3.02
836	n2805	n2806	29.82	180	1.35
837	n2806	n2810	30.35	180	1.44
838	n2815	n2814	10.75	180	1.145
839	n2814	n2813	7.03	180	1.63
840	n2813	n2812	11.76	180	1.725
841	n2812	n2811	29.96	180	1.97
842	n2811	n2810	30	180	1.97
843	n2810	n2809	29.35	180	1.24
844	n2809	n2808	29.95	180	0.6
845	n2808	n2796	62.74	180	1.965
847	n3212	n3213	10.53	180	1.98
848	n3213	n3214	30	180	2.245
849	n3214	n3222	29.98	180	2.13
850	n3222	n3223	29.95	180	1.415
851	n3223	n3224	25.39	180	1
852	n3224	n3225	5.95	180	1
853	n3225	n3226	23.53	180	1
854	n3226	n3227	29.98	180	1
855	n3227	n3170	33.64	180	1.34
856	n2336	n2334	39.14	180	1
857	n2334	n2333	20.52	180	1
858	n2333	n2332	30	180	1
859	n2332	n2331	30	180	1
860	n2331	n1085	36.01	180	1.235
861	n2337	n2338	30	180	1.26

862	n2338	n2339	29.99	180	1.49
863	n2339	n2340	29.98	180	1.295
864	n2340	n2380	29.37	180	1.065
865	n2380	n3216	32.98	180	1
866	n3215	n3220	27.41	180	1
867	n3220	n3219	29.98	180	1
868	n3219	n3218	30	180	1
869	n3218	n3217	14.67	180	1
870	n3217	n1070	13.98	180	0.8
871	n1070	n1069	15.14	180	1
872	n1069	n1068	21.01	180	1
873	n1068	n1067	8.63	180	1
874	n1067	n1066	19.74	180	1
875	n1066	n1065	9.22	180	1
876	n1065	n1064	29.86	180	1
877	n1064	n1061	29.92	180	1
878	n1061	n1062	29.96	180	1.175
879	n1062	n1063	30	180	1.335
880	n1063	n1060	21.53	180	1.355
881	n2366	n2365	29.61	180	1.195
882	n2365	n2362	29.82	180	1.7
883	n2364	n2363	21.72	180	0.8
884	n2363	n2362	29.93	180	1.305
885	n2362	n2361	20.98	180	1.955
886	n2361	n2360	21.51	180	1.55
887	n2360	n3097	26.61	180	1.1
888	n3097	n2353	10.81	180	1
889	n2353	n1165	30.87	180	1.05
890	n846	n845	29.98	180	1.25
891	n2528	n2527	29.87	180	1.285
892	n2527	n2526	13.63	180	1.45
893	n2526	n2525	15.93	180	1.29
894	n3163	n2530	15.67	180	1
895	n2530	n2531	30	180	1.065
896	n2531	n2525	29.95	180	1.19
897	n2525	n2524	29.15	180	1.125
898	n2524	n2523	29.86	180	1
899	n2523	n2522	29.87	180	1
900	n2522	n2521	29.46	180	1
901	n2521	n1105	38.09	180	3.365
902	n812	n811	29.95	250	1
903	n811	n810	29.99	250	1
904	n810	n809	30	250	1
905	n1165	n1162	26.52	180	1.22

906	n2622	n1161	29.96	180	1.805
907	n1162	n1161	29.95	180	1.975
908	n809	n808	29.99	250	1.1
909	n2352	n2351	10.23	180	1
910	n2351	n2350	29.99	180	1
911	n2350	n2349	29.96	180	1
912	n2349	n2348	29.7	180	1
913	n2348	n2346	17.73	180	1
914	n2346	n1159	15.12	180	1
915	n1159	n1049	84.51	250	1
916	n2752	n2753	29.93	180	1
917	n2753	n2754	25.33	180	1
918	n2754	n2756	22.18	180	1
919	n2756	n2742	36.57	180	1.69
920	n2749	n2750	29.97	180	1.05
921	n2750	n2751	22.87	180	1.14
922	n2751	n2747	36.65	180	1.165
923	n2747	n2746	23.45	180	1.35
924	n2746	n2744	21.66	180	1.66
925	n2742	n2764	34.94	180	2.23
926	n2764	n2763	20.44	180	2.03
927	n2763	n2762	29.99	180	2.11
928	n2762	n2761	29.98	180	2.385
929	n2761	n2760	29.98	180	2.55
930	n2760	n2795	62.41	180	2.99
931	n3029	n3030	21.25	180	1
932	n3030	n3031	8.42	180	1.075
933	n3031	n3032	29.95	180	1.175
934	n3032	n2715	28.9	180	1.1
936	n2714	n2713	30	180	1.02
937	n2713	n2712	20.06	180	1.39
938	n2712	n2710	37.75	180	1.73
939	n2710	n2709	29.91	180	1.615
940	n2709	n2708	29.99	180	1.255
941	n2708	n2707	9.35	180	1
942	n2707	n2706	11.22	180	1
943	n2706	n2705	18.43	180	1
944	n2705	n2704	29.95	180	1
945	n2704	n2703	8.44	180	1
946	n2703	n2770	23.44	180	1.045
947	n2770	n2769	29.95	180	1.16
948	n2769	n2768	29.99	180	1.39
949	n2768	n2767	30	180	1.625
950	n2767	n2766	29.96	180	1.825

951	n2766	n2758	29.97	180	1.99
952	n2758	n2759	8.36	180	2.07
953	n2759	n2760	21.33	180	2.34
954	n2774	n2689	46.71	180	1.77
955	n2775	n2774	10.77	180	1
956	n2773	n2774	18.66	180	1
957	n2778	n2776	27.74	180	1
958	n2776	n2775	27.27	180	1
959	n2779	n2780	29.84	180	1
960	n2780	n2707	29.33	180	1
961	n2696	n2687	30.15	180	1.85
962	n2702	n2703	29.96	180	1
963	n2822	n2829	39.47	180	2.13
964	n2829	n2828	29.18	180	1
965	n2828	n2827	42.6	180	1
966	n2827	n2824	45.77	180	1
967	n2824	n2823	29.7	180	1
968	n2823	n2788	29.47	180	2.515
969	n2788	LS-13	12.43	300	2.09
970	n2787	n2786	29.94	300	1.195
971	n2786	n2785	29.99	300	1.49
972	n2785	n2784	29.99	300	2.21
973	n2784	n2783	29.97	300	2.5
974	n2783	n2782	30	300	2.175
975	n2782	n2781	30	300	2.345
976	n2781	n1287	29.61	300	2.79
977	n1306	n1305	19.12	180	1.4
978	n1305	n1304	29.62	180	2.06
979	n1304	n1287	29.16	180	2.695
980	n1287	n1288	25.27	300	4.1
981	n1288	n1303	29.99	300	5.455
982	n1303	n1286	29.99	300	5.94
983	n1286	8	1	300	5.475
984	n3089	n3019	35.46	180	1.58
985	n3019	n3018	29.97	180	2.96
986	n1346	n1345	29.91	180	1
987	n1345	n1344	29.96	180	1
988	n1344	n1302	15.32	180	2.57
989	n3018	n1302	29.15	180	3.95
990	n1302	n1301	20.06	180	4.585
991	n1301	n1299	37.2	180	4.65
992	n1299	n1297	27.85	180	4.2
993	n1297	n1296	17.98	180	4.145
994	n1296	n1295	29.99	180	4.265

995	n1295	n1294	30	180	4.3
996	n1294	n1293	29.94	180	4.345
997	n1293	n1292	29.99	180	4.815
998	n1292	n1291	29.07	180	5.335
999	n1291	n1290	29.55	180	5.01
1000	n1290	n1289	29.84	180	3.895
1001	n1289	n1286	14.95	180	4.685
1002	n1250	n1251	24.48	180	1.805
1003	n1251	n1240	16.44	180	2.905
1004	n1240	n1241	29.34	180	3.275
1005	n1241	n1242	30	180	3.245
1006	n1242	n1243	38.61	180	3.105
1007	n1243	n1244	24.55	180	3.1
1008	n1244	n1246	31.45	180	3.055
1009	n1246	n1247	27.86	180	2.855
1010	n1247	n1248	13.93	180	2.875
1011	n3071	n1284	9.28	180	1.235
1012	n1284	n1285	29.95	180	2.125
1013	n1285	n1248	29.96	180	2.9
1014	n1248	n1282	30	180	3.425
1015	n1282	n1283	16.03	180	3.88
1016	n1283	n1286	16.27	180	5.015
1017	n1307	n1308	29.83	180	2.57
1018	n1239	n1238	31.86	180	1
1019	n1238	n1237	29.04	180	1
1020	n1237	n1233	23.76	180	1.945
1021	n1234	n1235	29.95	180	1.225
1022	n1235	n1233	36.27	180	2.37
1023	n1233	n1232	19.91	180	3.095
1024	n1232	n1231	11.99	180	3.415
1025	n1231	n1230	20.12	180	3.8
1026	n1230	n1229	29.76	180	4.105
1027	n1229	n1228	9.73	180	4.005
1028	n1228	n1227	19.96	180	3.655
1029	n1227	n1226	29.11	180	2.52
1030	n1226	n1225	29.5	180	1.495
1031	n1225	n1224	29.28	180	1.39
1032	n1224	n1223	29.5	180	1.42
1033	n1223	n1222	29.91	180	1.565
1034	n1222	n1221	11.51	180	1.74
1035	n1221	n1218	18.26	180	2.335
1036	n1218	n1217	29.99	180	3.135
1037	n1217	n1216	30	180	3.57
1038	n1216	n1214	29.95	180	3.895

1039	n1215	n1214	30.15	180	2.525
1040	n1214	n1213	18.34	180	4.235
1041	n1213	n1209	29.97	180	4.71
1042	n2971	n2970	29.99	180	1.165
1043	n2970	n2969	29.99	180	1.445
1044	n2965	n2966	30	180	1.195
1045	n2966	n2967	27.86	180	1.515
1046	n2969	n2967	22.28	180	1.625
1047	n2964	n2965	29.99	180	1.025
1048	n2967	n2968	29.99	180	1.77
1049	n2968	n2963	29.83	180	1.965
1050	n2963	n2962	30	180	2.135
1051	n2962	n1209	16.38	180	3.595
1052	n1209	LS-14	6.9	180	2.575
1053	n1208	n1207	29.79	300	1
1054	n1207	n1197	29.32	300	1.74
1055	n1206	n1205	14.33	180	1.065
1056	n1205	n1204	15.19	180	1.365
1057	n1204	n1203	29.67	180	1.905
1058	n1203	n1197	29.92	180	2.345
1059	n1202	n1276	31.5	180	1.315
1060	n1276	n1277	12.39	180	1.655
1061	n1277	n1278	29.09	180	1.83
1062	n1278	n1279	29.85	180	2.135
1063	n1279	n1219	29.81	180	2.435
1064	n1219	n1218	26.1	180	2.725
1065	n1281	n1280	9.34	180	1.29
1066	n1280	n1219	29.89	180	2.08
1067	n1197	n1196	24.18	300	2.575
1068	n1196	n1184	29.39	300	2.84
1069	n1198	n1184	29.98	180	2.555
1070	n1184	n1183	16.97	300	3.085
1071	n1200	n1199	29.88	180	1
1072	n1199	n1198	30	180	1.55
1073	n1183	n1179	29.98	300	3.215
1074	n1182	n1181	29.99	180	1.49
1075	n1181	n1180	29.98	180	2.52
1076	n1180	n1179	26.22	180	3.165
1077	n1179	n1178	29.93	300	3.335
1078	n1178	n1177	24.42	300	3.775
1079	n1174	n1173	30	0.18	1.3
1080	n1173	n1171	34.41	180	1.765
1081	n1171	n1170	24.6	180	2.11
1082	n1170	n1169	29.07	180	2.525

1083	n3073	n1167	36.07	180	1
1084	n1167	n1168	29.94	180	1.395
1085	n1168	n1169	29.97	180	2.275
1086	n1169	n1176	35.21	180	2.88
1087	n1176	n1177	29.62	180	3.575
1089	n1194	n1193	29.41	300	1.16
1090	n1193	n1192	29.67	300	1.545
1091	n1192	n1191	29.9	300	1.975
1092	n1191	n1190	29.96	300	2.33
1093	n1190	n1189	29.98	300	2.455
1094	n1189	n1188	13.35	300	2.53
1095	n1188	n1187	15.68	300	2.71
1096	n1187	LS-16	30	300	3.52
1097	n1331	n1330	7.44	180	1
1098	n1330	n1329	29.68	180	1
1099	n1329	n1328	29.95	180	1
1100	n1328	n1325	29.98	180	1
1101	n2617	n2604	23.76	180	1
1102	n2604	n2618	19.44	180	0.8
1103	n2618	n2619	29.92	180	1
1104	n2619	n2620	18.51	180	1
1105	n2620	n2621	11.1	180	1
1106	n2621	n1149	29.94	180	1
1107	n1149	n1151	32.16	180	1
1108	n1160	n1151	30.96	180	1.37
1109	n1151	n1152	29.92	180	1
1110	n1153	n1159	39.82	180	1.14
1111	n1152	n1153	29.93	180	1.14
1112	n1154	n1155	6.13	180	1
1113	n1155	n1156	23.52	180	1
1114	n1156	n1157	29.64	180	1
1115	n1157	n1158	29.97	180	1
1116	n1158	n1153	13.72	180	1.14
1117	n1310	n1311	18.25	180	1
1118	n1311	n1312	11.26	180	1.1
1119	n1312	n1313	30	180	1.905
1120	n1313	n1308	16.1	180	3.375
1121	n3015	n3016	8.25	180	1.34
1122	n3016	n3017	19.38	180	2.47
1123	n1321	n1319	13.36	180	2.815
1124	n3017	n1319	13.52	180	3.945
1125	n1319	n1318	30	180	4.61
1126	n1318	n1317	29.78	180	4.485
1127	n1317	n1316	29.54	180	3.945

1128	n1316	n1315	29.93	180	2.85
1129	n1315	n1308	32.84	180	3.165
1130	n1325	n1326	32.87	300	1
1131	n1326	n1309	29.98	300	1
1132	n2921	n1228	43.02	180	2.75
1133	n2922	n2921	23.32	180	1.315
1134	n1309	n2932	29.77	300	1
1135	n2932	n2930	10.88	300	1.64
1136	n2923	n2922	15.51	180	1
1137	n2924	n2923	11.2	180	1
1138	n2926	n2924	28.51	180	0.8
1139	n2927	n2926	29.86	180	0.8
1141	n2930	n2931	29.65	300	2.64
1142	n2931	n1275	29.97	300	3.17
1143	n1275	n1273	23.55	300	3.68
1144	n1273	n1270	34.95	300	4.065
1145	n1270	n1269	29.78	300	3.785
1146	n1269	n1268	29.94	300	3.035
1147	n1268	n1266	29.93	300	3.13
1148	n1264	n1265	29.69	180	1.65
1149	n1265	n1266	19.82	180	2.975
1150	n1266	n1267	29.9	300	3.6
1151	n1267	n1263	29.57	300	3.565
1152	n1263	n1262	29.68	300	2.905
1153	n1262	n1261	34.67	300	1.935
1154	n1261	n1212	31.09	300	1.32
1155	n1212	n1211	23.01	300	1.04
1156	n1211	n1210	13.75	300	1.185
1157	n1210	n1209	17.97	300	3.145
1158	n1352	n1351	29.92	180	1
1159	n1351	n1350	29.47	180	1
1160	n1350	n1348	28.44	180	1
1161	n1348	n1347	28.69	180	1
1162	n1347	n2615	29.46	180	1
1163	n2615	n2616	28.86	180	1
1164	n754	n753	32.41	180	1.7
1165	n756	n753	25.67	180	1.7
1166	n753	n757	27.77	180	2.85
1167	n757	n758	29.89	180	3.2
1168	n758	n759	29.58	180	2.095
1169	n759	n760	29.95	180	1.045
1170	n760	n761	18.95	180	1
1171	n761	n762	10.15	180	1.06
1172	n762	n763	29.86	180	1.19

1173	n763	n764	29.97	180	1.345
1174	n764	n765	29.97	180	1.45
1175	n765	n766	29.84	180	1.485
1176	n777	n776	26.62	180	1
1177	n776	n772	30.03	180	1
1178	n772	n771	22.32	180	0.8
1179	n771	n770	29.99	180	1
1180	n770	n769	29.99	180	1.055
1181	n769	n768	30	180	1.22
1182	n768	n767	29.96	180	1.635
1183	n766	n767	23.6	180	1.72
1184	n767	n778	14.77	180	2.295
1185	n829	LS-18	21.21	180	4.53
1186	n1335	n1336	28.68	180	1
1187	n1336	n1321	25.2	180	1
1188	n1334	n1333	9.19	180	1.85
1189	n1333	n1332	29.95	180	2.435
1190	n1332	n1331	29.52	180	1.585
1192	n1363	n1364	29.95	180	1.065
1193	n1364	n1365	29.9	180	1
1194	n1365	n1359	29.8	180	1
1195	n1359	n2899	28.86	180	1
1196	n2899	n2900	22.01	180	1
1197	n2900	n2901	7.64	180	1
1198	n1356	n1357	18.42	180	1
1199	n1357	n1358	29.37	180	1
1200	n1358	n1361	29.67	180	1
1201	n1355	n1347	21.22	180	0.8
1202	n1361	n1360	30	180	1
1203	n1360	n1359	29.14	180	1
1204	n2901	n2902	29.9	180	1
1205	n2902	n2903	29.97	180	2.265
1206	n1373	n1372	29.96	180	1
1207	n1372	n1370	25.09	180	1
1208	n1370	n1369	29.8	180	1
1209	n3156	n2726	42.98	180	1.245
1210	n2726	n2727	29.99	180	1.855
1211	n2732	n2731	29.84	180	1
1212	n2731	n2730	29.94	180	1.405
1213	n2730	n2729	30	180	1.705
1214	n2729	n2728	29.94	180	1.485
1215	n2727	n2724	29.98	180	2.76
1216	n2728	n2724	29.99	180	2.335
1217	n2717	n2718	11.84	180	1.14

1218	n2718	n2719	18.09	180	1.415
1219	n2719	n2720	30	180	1.7
1220	n2720	n2721	30	180	2.925
1221	n2716	n2737	16.74	180	1
1222	n2737	n2738	29.98	180	1
1223	n2738	n2739	29.99	180	1.025
1224	n2740	n2741	29.99	180	1.195
1225	n2739	n2741	29.9	180	1.22
1226	n2741	n2721	32.42	180	2.695
1227	n2715	n2716	20.6	180	1
1228	n2724	n2722	29.31	180	3.995
1229	n2721	n2722	27.32	180	4.345
1230	n2722	LS-19	23.57	180	4.74
1231	n3206	n3207	14.82	180	1.1
1232	n3207	n3208	29.29	180	1.3
1233	n3208	n3209	29.99	180	1.52
1234	n3209	n3192	30	180	1.785
1235	n3192	n3191	9.05	180	2.005
1236	n2733	n2734	30	180	1.255
1237	n2734	n2735	29.97	180	1.74
1238	n2735	n2736	29.56	180	2.54
1239	n2736	n2383	30.14	180	3.16
1241	n2933	n1275	16.29	180	2.17
1242	n2934	n2935	29.97	180	1.17
1243	n2935	n2941	24.38	180	1.345
1244	n2941	n2945	29.91	180	1.5
1245	n3076	n2940	9.8	180	0.8
1246	n2940	n2939	8.79	180	1
1247	n842	n843	29.13	180	1.09
1248	n843	n844	29.05	180	1.09
1249	n844	n830	51.79	180	2.56
1250	n827	n825	43.18	180	1.905
1251	n845	n841	19.32	180	1.61
1252	n841	n840	30	180	1.635
1253	n825	n824	29.68	180	4.23
1254	n824	LS-21	10.34	180	2.9
1255	n840	n839	30	180	2.165
1256	n839	n824	16.06	180	4.215
1257	n823	n822	29.98	180	1.41
1258	n822	n821	29.89	180	2.275
1259	n821	n820	29.96	180	3.465
1260	n819	n818	29.97	180	1.1
1261	n820	LS-22	18.46	180	4.3
1262	n818	n817	29.96	180	1.4

1263	n817	n815	37.14	180	1.485
1264	n815	n812	33.18	180	1.185
1265	n778	n779	32.95	180	3.595
1266	n3141	n790	12.93	180	1.365
1267	n790	n788	29.75	180	2.245
1268	n788	n789	29.4	180	3.08
1269	n789	6	26.49	180	3.24
1270	6	n779	26.62	180	3.81
1271	n779	LS-23	12.19	180	4.37
1272	n782	n783	23.42	180	1
1273	n783	n779	43.76	180	2.77
1274	n781	n791	28.94	180	1.435
1275	n791	n792	29.89	180	2.3
1276	n792	n793	29.93	180	2.85
1277	n795	n793	30.38	180	1.985
1278	n793	n799	12.69	180	2.81
1279	n799	n798	22.95	180	2.39
1280	n798	n797	29.9	180	1.865
1281	n800	n801	26	180	1.235
1282	n801	n802	30	180	2.645
1283	n796	n802	29.38	180	4.005
1284	n797	n796	14.04	180	2.895
1285	n3158	n2561	22.33	180	1.28
1286	n2561	n2555	32.41	180	2.475
1287	n2560	n2559	29.99	180	1.2
1288	n2559	n2555	27.54	180	2.395
1289	n2555	n2556	16.06	180	3.89
1290	n684	n683	29.46	180	1
1291	n683	n682	11.25	180	1
1292	n682	n681	19.07	180	1
1294	n681	n2319	28.48	180	1
1295	n2319	n2318	29.99	180	1
1296	n2318	n2317	29.98	180	1.495
1297	n686	n684	33.04	180	1.1
1298	n687	n686	25.93	180	1.1
1299	n688	n687	29.99	180	1
1300	n3204	n3203	9.51	180	1.065
1301	n3203	n3202	20.26	180	1.28
1302	n3202	n3198	21.42	180	1.485
1303	n3200	n3201	30	180	1.125
1304	n3201	n3198	29.99	180	1.395
1305	n3198	n3197	24.74	180	1.615
1306	n3197	n3196	30	180	1.765
1307	n3196	n3194	29.91	180	1.985

1308	n3195	n3194	18.12	180	1.565
1309	n3191	n3190	20.75	180	2.36
1310	n3194	n3190	24.2	180	2.385
1311	n3190	n3189	22.53	180	3.26
1312	n3189	LS-24	13.86	180	4.065
1313	n2949	n2946	10.19	180	1
1314	n2946	n2945	15.77	180	1.325
1315	n2950	n2949	29.68	180	1
1316	n2951	n2950	18.48	180	1
1317	n2946	n2947	29.78	180	1
1318	n2947	n2948	9.64	180	1
1319	n2936	n2943	23.82	180	1
1320	n2942	n2943	6.48	180	1
1321	n2943	n2944	23.47	180	1
1322	n2944	n2948	19.71	180	1
1323	n2948	n2912	50.32	180	1
1324	n2939	n1366	40.58	180	1
1325	n2937	n2938	7.85	180	1.085
1326	n2938	n2939	19.59	180	1.085
1327	n2912	n2913	15.88	180	1
1328	n2913	n2914	8.69	180	1
1329	n1366	n2914	48.85	180	1
1330	n2382	n2381	17.25	180	1.3
1331	n2381	n3185	40.29	180	1.3
1332	n3090	n2651	23.75	180	1.775
1333	n2651	n2652	20.07	180	3.7
1334	n3210	n3211	23.16	180	1.115
1335	n3211	n3212	29.99	180	1.565
1336	n2608	n2609	24.58	180	1
1337	n2609	n2610	29.97	180	1
1338	n2611	n2610	27.92	180	1
1339	n2610	n2612	29.99	180	1.585
1340	n2612	n2607	38.52	180	2.83
1341	n2616	n2607	29.98	180	2.245
1342	n2605	n2607	29.19	180	2.245
1343	n1369	n1368	22.26	180	1
1344	n1368	n1366	36.78	180	1
1345	n1362	n1373	32.86	180	1
1346	n2914	n2915	20.49	180	1
1347	n2952	n2951	11.14	180	1
1348	n2953	n2961	33.86	180	1
1349	n2961	n2956	29.86	180	1
1350	n2956	n2957	29.96	180	1
1351	n2957	n2958	14.88	180	1

1352	n2958	n2916	66.1	180	1
1353	n2916	n2917	29.99	180	1.26
1354	n2917	n2918	29.98	180	1.82
1355	n2918	n2919	16.63	180	2.3
1356	n2919	n2904	23.6	180	2.59
1357	n2915	n2904	29.88	180	1.85
1358	n2904	n2906	38.06	180	2.885
1359	n2906	n2903	30	180	3.3
1360	n2903	n2907	9.33	180	3.395
1361	n2907	n2908	29.85	180	2.87
1362	n2908	n2909	28.92	180	3.165
1363	n2909	LS-25	16.43	180	4.025
1364	n3077	n3011	34.38	180	1
1365	n3013	n3011	21.06	180	1
1366	n3011	n1347	27.94	180	1
1367	n1337	n1338	29.96	180	1
1368	n1338	n1339	29.93	180	1
1369	n1339	n1340	20.77	180	1
1370	n1340	n1341	16.75	180	1.17
1371	n1341	n1342	29.82	180	1.49
1372	n808	n807	15.09	250	1.3
1373	n807	n1112	34.4	250	1.44
1374	n1112	n1111	29.99	250	1.77
1375	n1111	n1110	30	250	2.375
1376	n1110	n1109	30	250	3.015
1377	n1109	n1108	15.37	250	3.565
1378	n1115	n1108	29.78	180	2.395
1379	n1108	n1107	29.99	250	4.18
1380	n1107	n1106	29.99	250	5.035
1381	n1106	n1105	17.14	250	5.615
1382	n1105	LS-26	11.52	250	4.965
1383	n1125	n1123	29.9	180	1.8
1384	n1123	n1121	24.31	180	3.005
1385	n806	n805	29.67	180	1
1386	n805	n804	29.81	180	1
1387	n804	n803	29.97	180	1
1388	n803	n796	29.49	180	2.595
1389	n802	7	30	180	2.48
1390	7	9	31.9	180	1.74
1391	9	n3162	31.52	180	2.94
1392	n3162	n1122	28.9	180	4.19
1393	n3259	n1104	14.2	250	1.075
1394	n1104	n1103	29.99	250	1.255
1395	n1103	n1102	30	250	1.495

1396	n1102	n1101	30	250	1.74
1397	n1101	n1100	30	250	1.885
1398	n1100	n1099	30	250	1.91
1399	n1099	n1098	30	250	2.31
1400	n2533	n2534	17.3	180	1.22
1401	n2534	n1098	29.95	180	2.08
1402	n1098	n1097	29.58	250	2.58
1403	n1097	n1096	30	250	2.29
1404	n1096	n1094	37.57	250	3.21
1405	n690	n691	11.77	180	1.22
1406	n2541	n692	29.97	180	1.26
1407	n691	n692	25.11	180	1.48
1408	n692	n2544	27.18	180	1.495
1409	n2544	n2547	19.49	180	1.695
1410	n2542	n2547	27.91	180	1.46
1411	n2547	n2548	30	180	2.145
1412	n2543	n2548	29.05	180	1.685
1413	n2548	n2549	30	180	1.84
1414	n2549	n2550	30	180	1.41
1415	n2550	n1094	29.91	180	2.895
1416	n1094	LS-27	10.22	250	2.215
1417	n2540	n2539	29.86	180	1
1418	n2554	n2553	14.77	180	1.585
1419	n2553	n2552	30	180	2.265
1420	n2552	n2551	30	180	2.455
1421	n2551	n2546	29.83	180	2.135
1422	n2556	n2557	29.91	180	4.87
1423	n2545	n2544	16.34	180	1.235
1424	n2557	n2558	29.99	180	5.81
1425	n2546	n2558	29.95	180	3.995
1426	n2558	LS-28	12.12	180	6.32
1427	n1093	n1092	29.95	250	1
1428	n1092	n1091	29.99	250	1
1429	n1091	n1090	29.99	250	1
1430	n1090	n1089	29.99	250	1
1431	n1089	n1088	29.92	250	1
1432	n1088	n1087	29.99	250	1
1433	n1087	n1086	29.99	250	1
1434	n1086	n1085	21.28	250	1.235
1435	n3185	n3186	29.94	180	1
1436	10	n3189	42.27	180	2.44
1438	n2656	n2655	24.02	180	1
1439	n2655	n2654	29.9	180	1
1440	n2654	n2653	11.88	180	1.11

1442	n2660	n2659	17.13	180	1
1443	n2659	n2656	43.39	180	1
1445	n2377	n2376	29.88	180	1
1446	n2376	n2372	37.03	180	1.1
1447	n2372	n3092	30.82	180	1.6
1448	n3216	n2377	35.38	180	1
1449	n2652	LS-29	10.54	180	4.9
1450	n2650	n2649	29.97	180	1.08
1451	n2649	n2646	12.96	180	1.17
1452	n2646	n2647	30.33	180	1.67
1453	n1342	n1343	29.99	180	1.805
1454	n1343	n2641	29.99	180	2.205
1455	n2641	n2642	29.97	180	2.595
1456	n2642	n2643	29.97	180	2.76
1457	n2647	n2648	30.07	180	2.785
1458	n2643	n2644	17.09	180	3.385
1459	n2648	n2644	10.25	180	3.705
1460	n3092	n2370	20.73	180	2.38
1461	n2370	n2368	26.38	180	3.43
1462	n2368	n2367	22.41	180	4.32
1463	n2644	n2645	16.52	180	4.385
1464	n2645	n2367	25.34	180	4.655
1465	n2367	LS-30	22.95	180	4.59
1466	n2629	n2630	20.81	180	1
1467	n2630	n2632	29.98	180	1
1468	n2632	n2631	13.92	180	1
1469	n2631	n2642	26.37	180	1.875
1470	n2640	n2639	18.27	180	1
1471	n2639	n2638	29.99	180	1
1472	n2638	n2637	29.98	180	1
1473	n2637	n1343	15.63	180	1.485
1474	n2625	n2624	30	180	1
1475	n2626	n2625	29.99	180	1
1476	n2624	n2640	34.93	180	1
1477	n2607	LS-31	8.2	180	3.845
1478	n2598	n2599	29.93	180	1.895
1479	n2599	n2600	29.96	180	3.59
1480	n2600	n2602	36.36	180	4.49
1481	n2602	LS-32	21.98	180	4.64
1482	n3061	n61	33.78	180	1.295
1483	n61	n60	15.59	180	1.645
1484	n60	n59	19.9	180	1.945
1485	n59	n57	27.9	180	2.59
1486	n3060	n3059	14.32	180	1

1487	n3059	n53	15.94	180	1
1488	n53	n52	24.1	180	1
1489	n475	n476	28.64	250	1.72
1490	n3066	n478	30	180	1.33
1491	n478	n477	29.99	180	1.84
1492	n477	n476	11.59	180	2.23
1493	n476	n486	34.83	250	2.965
1494	n486	n485	29.99	250	3.96
1495	n485	n484	15.04	250	4.67
1497	n483	n482	12.59	250	1.225
1498	n482	n481	16.71	250	1.555
1499	n481	n480	29.94	250	1.73
1500	n484	LS-33	9.68	250	5.005
1501	n480	n625	31.31	250	2.66
1502	n2744	n2742	29.07	180	2.075
1503	n1308	n1324	36.24	300	4.96
1504	n1324	LS-34	1	300	5.315
239	n1122	LS-35	5.6	180	4.425
285	n1121	n1120	22.21	180	3.69
288	n1120	n1122	42.36	180	4.405
289	n1119	n1118	29.94	180	2
812	n1118	n1106	29.83	180	4.25
1515	n470	LS-36	0.25	250	4.54
1519	n2842	n2843	13.76	180	1
1521	n607	n606	24.08	180	2.475
1534	n1161	n1160	19.43	180	2.175
1538	n384	n387	29.94	180	4.285
1539	n387	1	12.53	180	4.54
1542	n268	n267	30	180	1
1543	n267	n234	12.44	180	1.11
1544	n1177	LS-15	21.67	300	4.2
12	n3186	5	30	180	0.5
13	5	n2656	30	180	0.5
29	n2653	11	30	180	0.61
107	11	n3090	30	180	0.5
181	n542	n553	29.94	180	1.275
330	n28	n26	35.63	180	2.095
342	n43	n543	39.15	180	1.465

ANNEXURE A.3

ANNEXURE B
PROPOSED LAYOUT OF STP AT PATTAMBI

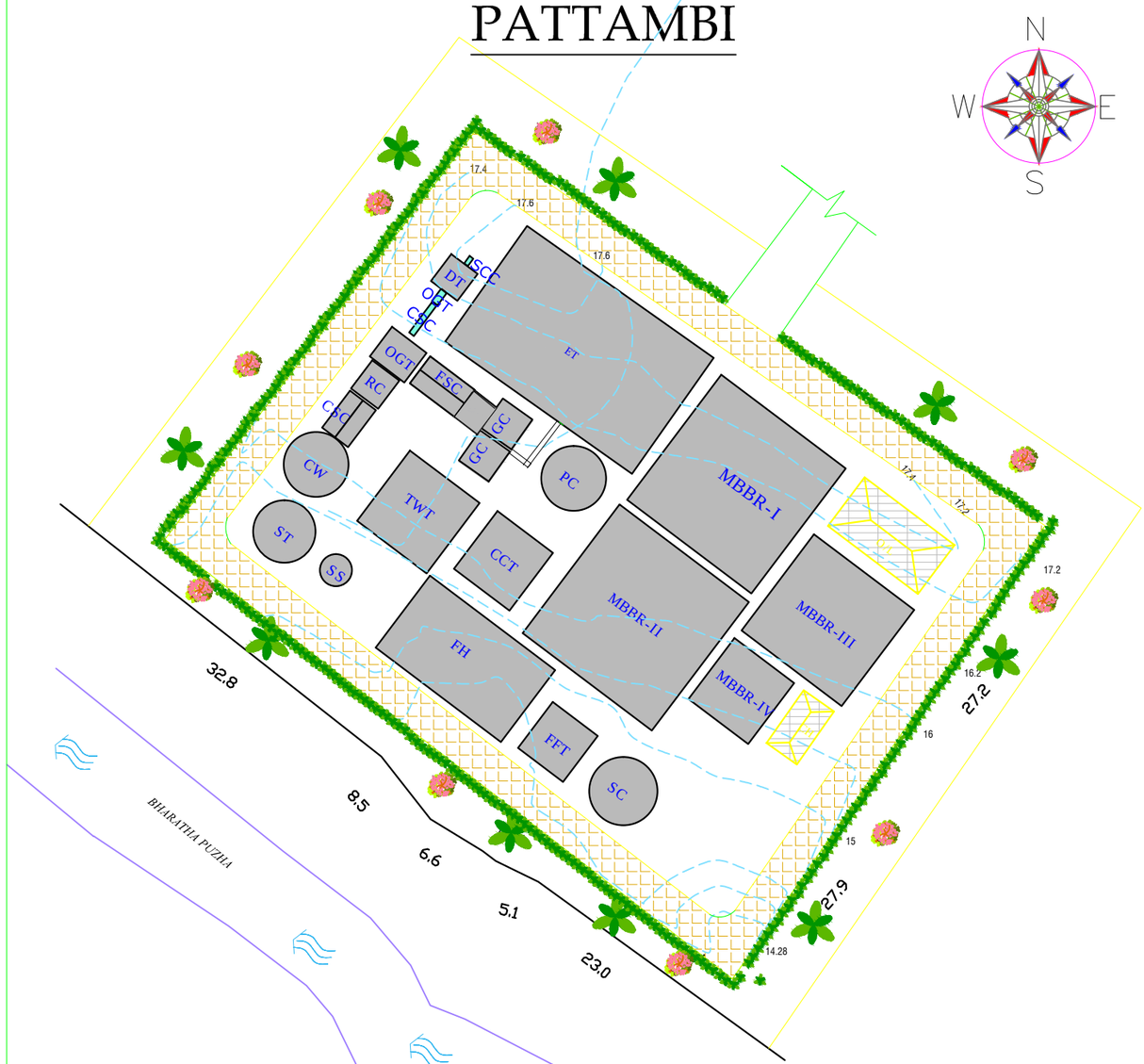

CW -Collection Well
SCC -Septage Collection Chamber
RC -Receiving Chamber
ET -Equalisation tank
FSC -Fine Screen Channel
GC -Grit Chamber
PF -Parshall Flume
PC -Primary Clarifier
MBBR -Moving Bed Biofilm Reacter
SC -Secondary Clarifier
FFT -Filter Feed Tank
FH - Filter House
CCT - Chlorine Contact tank
TWT - Treated Water Tank
CSC -Coarse Screen Chamber
DT -Dilution Tank
OGT -Oil and Greese Trap
SS -Sludge Sump
ST -Sludge Thickner
O/L - Office /Lab
CH - Chemical House

TOTAL EXTEND -108 cent
INCLUDING GREEN BELT =154 cent

KERALA WATER AUTHORITY

Sewerage Circle
Thrissur

FILE NO :KWA/PPD/	SCALE =
DRAWING NO :	DATE :
	CLIENT:
	PROJECT:
	JOB: LAYOUT PLAN OF PROPOSED 5.4 MLD STP AT PATTAMBI

AE
AEE
EE
SE

SURVEYORS: Crowned Eagle Survey and Development Ltd
Palakkad

Annexure C

SCHEMATIC DIAGRAM

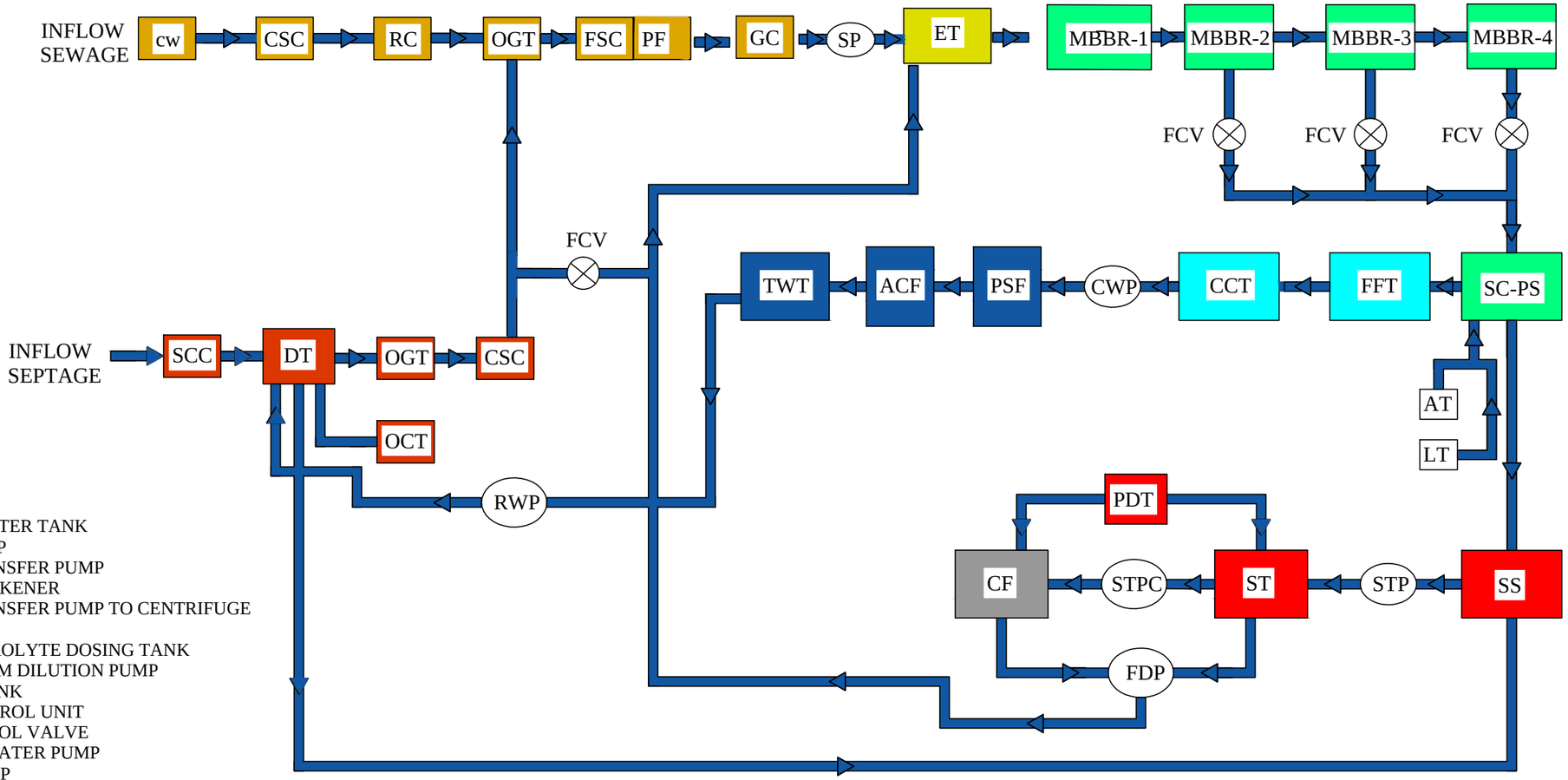

TWT - TREATED WATER TANK
SS - SLUDGE SUMP
STP - SLUDGE TRANSFER PUMP
ST - SLUDGE THICKENER
STPC - SLUDGE TRANSFER PUMP TO CENTRIFUGE
CF - CENTRIFUGE
PDT - POLY ELECTROLYTE DOSING TANK
FDP - FILTRATE CUM DILUTION PUMP
DT - DILUTION TANK
OCT - ODOUR CONTROL UNIT
FCV - FLOW CONTROL VALVE
RWP - RECYCLED WATER PUMP
SP - SEWAGE PUMP
MBBR-1 - MOVING BED BIO FILM REACTOR FOR BOD REMOVAL
MBBR-2 - MOVING BED BIO FILM REACTOR FOR NITRIFICATION
MBBR-3 - MOVING BED BIO FILM REACTOR FOR DE-NITRIFICATION
MBBR-4 - MOVING BED BIO FILM REACTOR FOR BOD REMOVAL AFTER DE-NITRIFICATION
SC-PS - SECONDARY CLARIFIER WITH PLATE SETTLER
FFT - FILTER FEED TANK
AT - ALUM TANK
LT - LIME TANK
CCT - CHLORINE CONTACT TANK
CWP - CLARIFIED WATER PUMP
PSF - PRESSURE SAND FILTER
ACF - ACTIVATED CARBON FILTER
RC - RECEIVING CHAMBER
OGT - OIL AND GREASE TRAP
CSC - COARSE SCREEN CHANNEL
FSC - FINE SCREEN CHANNEL
GS - GRIT SEPARATOR
ET - EQUALISATION TANK
PF - PARSHALL FLUME
CW - COLLECTION WELL

KERALA WATER AUTHORITY

SEWERAGE CIRCLE THRISSUR

PREPARED BY: SEWERAGE CIRCLE THRISSUR

AE.	
AEE.	
EE .	
SE .	

SCALE :

DATE: 04-02-2022

TITLE : **SCHEMATIC DIAGRAM OF 5.4 MLD CAPACITY STP FOR PATTAMBI MUNICIPALITY**

FILE NO :

DRAWING NO :

Annexure D

Tentative flow diagram of STP

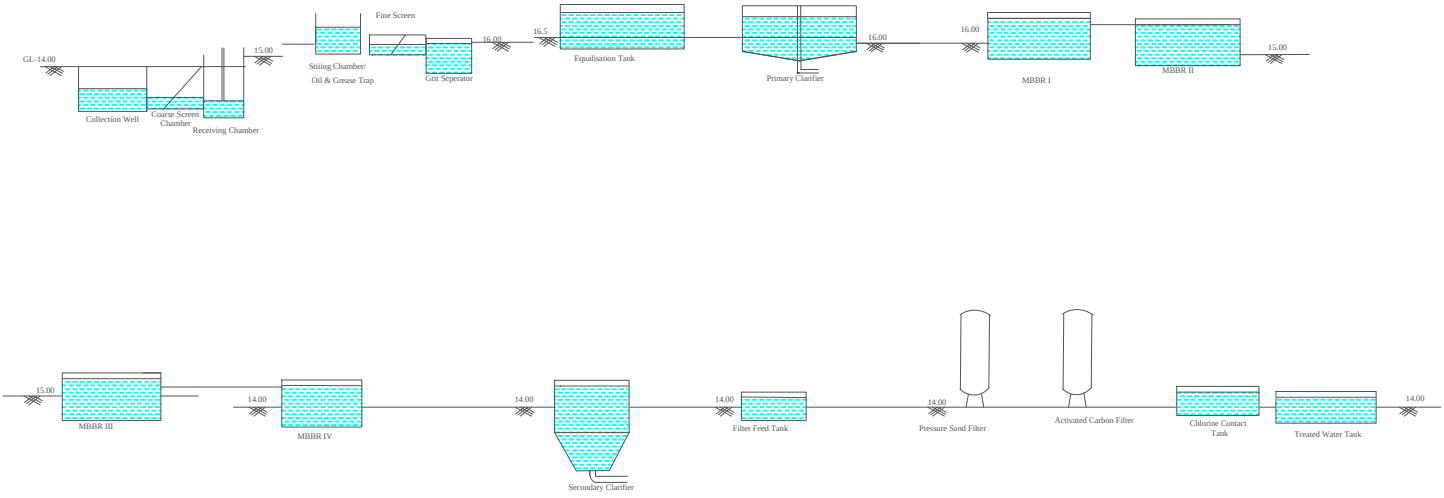

STP UNIT

SEPTAGE UNIT

KERALA WATER AUTHORITY	
Sewerage Circle Thrissur	
FILE NO :KWA/PPD/	SCALE =
DRAWING NO :	DATE :
	CLIENT:
	PROJECT:
	JOB: HYDROLIC FLOW DIAGRAM

ANNEXURE E

COMPONENTS DRAWINGS - STRUCTURAL

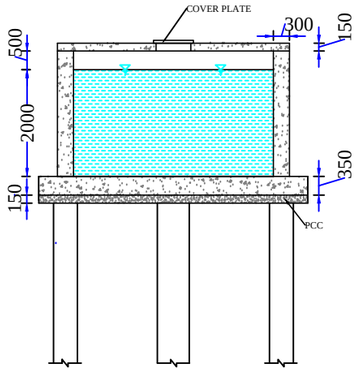

SECTION B-B

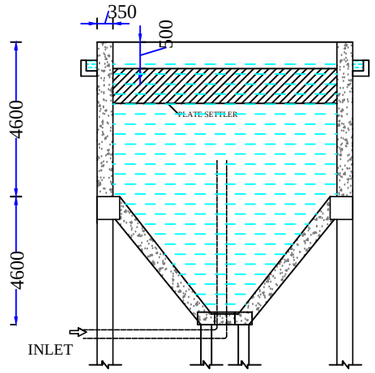

SECTION B-B

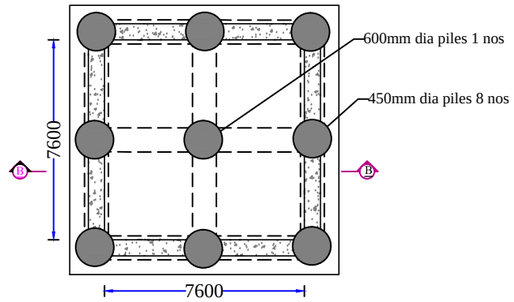

PLAN

CHLORINE CONTACT TANK

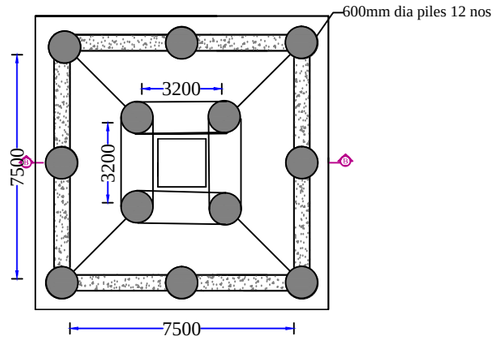

PLAN

SECONDARY CLARIFIER WITH PLATE SETTLER

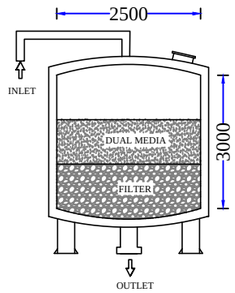

SECTION

PRESSURE SAND FILTER

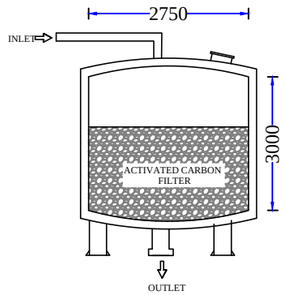

SECTION

ACTIVATED CARBON FILTER

Annexure F

STRUCTURAL DETAILS OF EQUALIZATION TANK

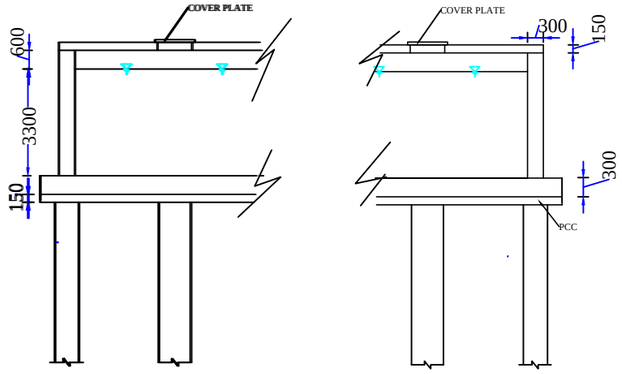

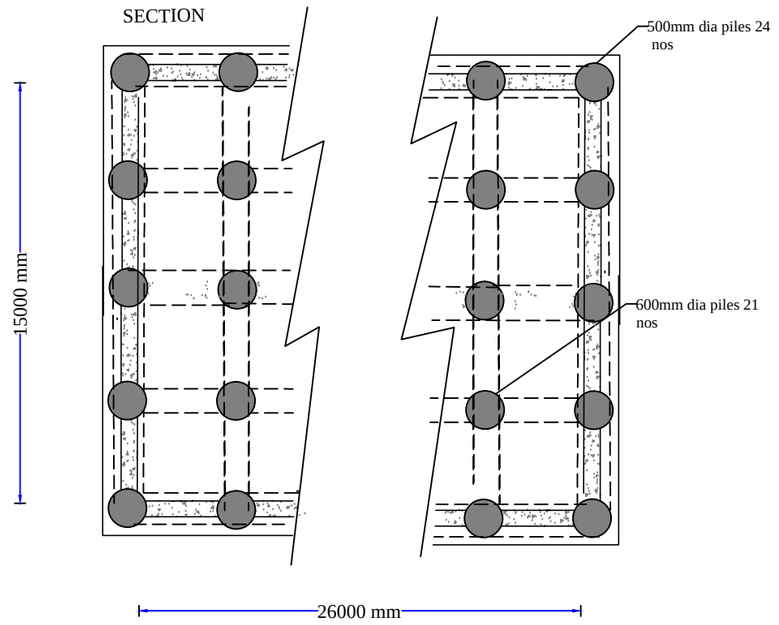

ANNEXURE G

DETAILS OF PRIMARY CLARIFIER

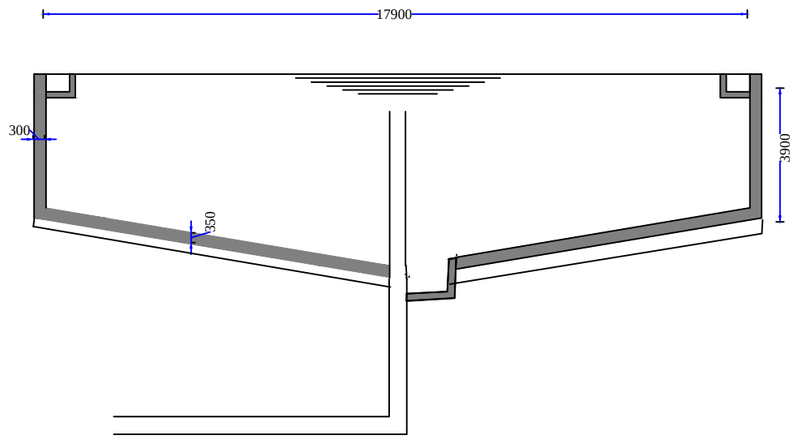

SECTION

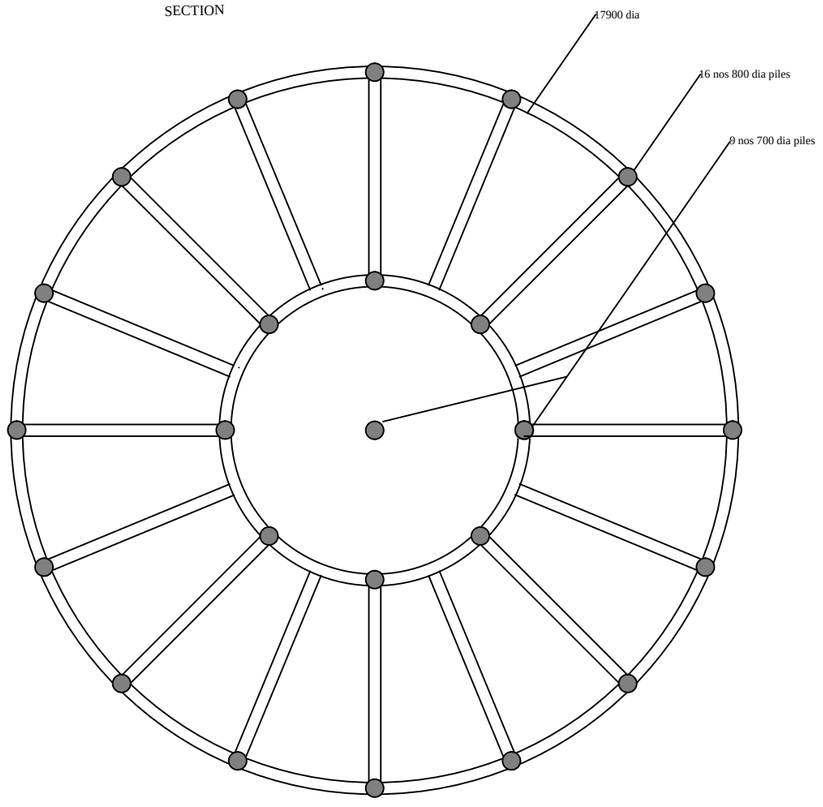

FOUNDATION DETAILS

പട്ടാമ്പി നഗരസഭ

25/08/2021 ലെ സാധാരണ കൗൺസിൽ യോഗത്തിലെ 22 ാം നമ്പർ തീരുമാനം

അജണ്ട (22)

കേരള വാട്ടർ അതോറിറ്റിക്ക് സീവേജ് ട്രീറ്റ്മെന്റ് പ്ലാന്റ് നിർമ്മിക്കുന്നതിന് സ്ഥലം ലഭ്യമാക്കുന്നത് സംബന്ധിച്ച്

തീരുമാനം നമ്പർ (22)

കേരള വാട്ടർ അതോറിറ്റിയുടെ സീവേജ് ട്രീറ്റ്മെന്റ് പ്ലാന്റിന് ആവശ്യമായ സ്ഥലം വിട്ട് നൽകാൻ തീരുമാനിച്ചു.

ചെയർപേഴ്സൺ

/ശരിപകർപ്പ്/

OFFICE OF THE PATTAMBI MUNICIPALITY
Date:
Palakkad (Dt)
679303
PATTAMBI. P.O

LAKSHMIKUTTY. O
CHAIR PERSON
PATTAMBI MUNICIPALITY

Scanned with CamScanner

DETAILED ESTIMATE

Others-Sewerage scheme to Pattambi Municipality-Sewerage network-Sewerage Work

Sl No	Specification	No	Length	Width	Depth	Cf	Quantity
1	1.Civil components - OIL AND GREEASE TRAP						
1.001	2.6.1						
	Earth work in excavation by mechanical means (Hydraulic excavator)/manual means over areas (exceeding 30 cm in depth, 1.5 m in width as well as 10 sqm on plan) including disposal of excavated earth, lead up to 50 m and lift up to 1.5 m, disposed earth to be levelled and neatly dressed.All kinds of soil						
	Earth work in excavation by mechanical means (Hydraulic excavator)/manual means						
	Oil & Grease Trap-STP	1	5.750	5.000	1.000		28.750
	Oil & Grease Trap-CTU	1	2.400	1.650	0.500		1.980
	Total						**30.730**
						Total Quantity in cum	**30.730**
1.002	4.1.6						
	Providing and laying in position cement concrete of specified grade excluding the cost of centering and shuttering - All work up to plinth level:1:3:6 (1 cement : 3 coarse sand : 6 graded stone aggregate 40 mm nominal size)						
	Providing and laying in position cement concrete of specified grade excluding the cost of centering and						
	For Oil &Grease Trap-STP	1	5.750	5.000	0.150		4.313
	For Oil &Grease Trap-CTU	1	2.400	1.650	0.150		0.594
	Total						**4.907**
						Total Quantity in cum	**4.907**
1.003	OD21898/2022-2023						

Sl No	Specification	No	Length	Width	Depth	Cf	Quantity
	(Item 5.37.1+5.34.1) Providing and laying in position ready mixed M-25 grade concrete for reinforced cement concrete work, using cement content as per approved design mix, manufactured in fully automatic batching plant and transported to site of work in transit mixer for all leads, having continuous agitated mixer, manufactured as per mix design of specified grade for reinforced cement concrete work including pumping of R.M.C. from transit mixer to site of laying, excluding the cost of centering, shuttering finishing and reinforcement including cost of admixtures in recommended proportions as per IS: 9103 to accelerate/ retard setting of concrete, improve workability without impairing strength and durability as per direction of the Engineer - in -charge. Note:- Cement content considered in this item is @330 kg/cum. Excess /less cement used as per design mix is payable/recoverable separately. All wiork upto plinth level Extra for providing richer mixes at all floor levels. Note:- Excess/less cement over the specified cement content used is payable/ recoverable separately. Providing M-30 grade concrete instead of M-25 grade BMC/RMC. (Note:- Cement content considered in M-30 is @ 340 kg/cum). 						
	For oil and grease trap-CTU						
	Bottom slab	1	2.400	1.650	0.300		1.188
	Long wall	2	2.100	0.250	1.550		1.628
	Short wall	2	0.750	0.250	1.550		0.581
	Total						**3.397**
	For oil and grease trap-STP						
	Bottom slab	1	5.750	5.000	0.400		11.500
	Long wall	2	5.350	0.300	3.250		10.433
	Short wall	2	4.000	0.300	3.250		7.800
	Total						**29.733**
						Total Quantity in cum	**33.130**
1.004	5.37.1						
	Providing and laying in position ready mixed M-25 grade concrete for reinforced cement concrete work, using cement content as per approved design mix, manufactured in fully automatic batching plant and transported to site of work in transit mixer for all leads, having continuous agitated mixer, manufactured as per mix design of specified grade for reinforced cement concrete work including pumping of R.M.C. from transit mixer to site of laying, excluding the cost of centering, shuttering finishing and reinforcement including cost of admixtures in recommended proportions as per IS: 9103 to accelerate/ retard setting of concrete, improve workability without impairing strength and durability as per direction of the Engineer - in -charge. Note:- Cement content considered in this item is @330 kg/cum. Excess /less cement used as per design mix is payable/recoverable separately.All wiork upto plinth level						
	Providing and laying in position ready mixed M-25 grade concrete for reinforced cement concrete work						
	top slap-STP	1	5.350	4.600	0.150		3.692
	top slap-CTU	1	2.100	1.250	0.150		0.394
	Total						**4.086**

Sl No	Specification	No	Length	Width	Depth	Cf	Quantity
	Providing and laying in position ready mixed M-25 grade concrete for reinforced cement concrete work(DEDUCTION)						
	Manhole	-2	0.600	0.450	0.150		-0.081
	Total						**-0.081**
						Total Quantity in cum	**4.005**
1.005	5.22.6						
	Steel reinforcement for R.C.C work including straightening, cutting, bending, placing in position and binding all complete upto plinth levelThermo - Mechanically Treated bars of grade Fe-500D or more						
	Steel reinforcement for R.C.C work including straightening, cutting, bending, placing in position						
	Quantity as per item no,3	1	33.131			120.000000	3975.720
	Quantity as per item no,4	1	4.005			100.000000	400.500
	Total						**4376.220**
						Total Quantity in kilogram	**4376.220**
1.006	4.12						
	Extra for providing and mixing water proofing material in cement concrete work in doses by weight of cement as per manufacturer's specification .						
	Extra for providing and mixing water proofing material in cement concrete work in doses by weight of cement						
	Quantity as per item no.3	1		33.131		340.000000	11264.540
	Quantity as per item no.4	1		4.005		330.000000	1321.650
	Total						**12586.190**
						Total Quantity in kg	**12586.190**
1.007	5.9.1						
	Centering and shuttering including strutting, etc. and removal of form for:Foundations, footings, bases of columns, etc for mass concrete						
	Centering and shuttering including strutting, etc. and removal of form for:						
	Bottom Slab - STP	2	11.950		0.450		10.755
	Bottom Slab - CTU	2	3.950		0.300		2.370
	Total						**13.125**
						Total Quantity in sqm	**13.125**
1.008	5.9.2						

Sl No	Specification	No	Length	Width	Depth	Cf	Quantity
	Centering and shuttering including strutting, etc. and removal of form for:Walls (any thickness) including attached pilasters, butteresses, plinth and string courses etc.						
	Centering and shuttering including strutting, etc. and removal of form for:						
	For walls outside -STP	2	9.950		3.250		64.675
	For walls inside - STP	2	8.750		3.250		56.875
	For walls outside -CTU	2	3.350		1.550		10.385
	For walls inside - CTU	2	2.350		1.550		7.285
	Total						**139.220**
						Total Quantity in sqm	**139.220**
1.009	5.9.3						
	Centering and shuttering including strutting, etc. and removal of form for:Suspended floors, roofs, landings, balconies and access platform						
	Centering and shuttering including strutting, etc. and removal of form for: Suspended floors, roo						
	Top slab-STP	2	9.950		0.150		2.985
	Bottom portion-STP	1	4.750	4.000			19.000
	Top slab-CTU	2	3.350		0.150		1.005
	Bottom portion-CTU	1	2.350	1.550			3.643
	Total						**26.633**
						Total Quantity in sqm	**26.633**
1.010	22.23.1						
	Providing and applying integral crystalline slurry of hydrophilic in nature for waterproofing treatment to the RCC structures like retaining walls of the basement, water tanks, roof slabs, podiums, reservior, sewage & water treatment plant, tunnels / subway and bridge deck etc., prepared by mixing in the ratio of 5 : 2 (5 parts integral crystalline slurry : 2 parts water) for vertical surfaces and 3 : 1 (3 parts integral crystalline slurry : 1 part water) for horizontal surfaces and applying the same from negative (internal) side with the help of synthetic fiber brush. The material shall meet the requirements as specified in ACI-212-3R-2010 i.e by reducing permeability of concrete by more than 90% compared with control concrete as per DIN 1048 and resistant to 16 bar hydrostatic pressure on negative side. The crystalline slurry shall be capable of self-healing of cracks up to a width of 0.50mm. The work shall be carried out all complete as per specification and the direction of the engineerin- charge. The product performance shall carry guarantee for 10 years against any leakage.For vertical surface two coats @0.70 kg per sqm						
	Providing and applying integral crystalline slurry of hydrophilic in nature for waterproofing treatment to the						

Sl No	Specification	No	Length	Width	Depth	Cf	Quantity
	Inside of walls - STP	2	8.750		3.250		56.875
	Inside of walls - CTU	2	2.350		1.550		7.285
	Total						**64.160**
						Total Quantity in sqm	**64.160**
1.011	22.23.2						
	Providing and applying integral crystalline slurry of hydrophilic in nature for waterproofing treatment to the RCC structures like retaining walls of the basement, water tanks, roof slabs, podiums, reservior, sewage & water treatment plant, tunnels / subway and bridge deck etc., prepared by mixing in the ratio of 5 : 2 (5 parts integral crystalline slurry : 2 parts water) for vertical surfaces and 3 : 1 (3 parts integral crystalline slurry : 1 part water) for horizontal surfaces and applying the same from negative (internal) side with the help of synthetic fiber brush. The material shall meet the requirements as specified in ACI-212-3R-2010 i.e by reducing permeability of concrete by more than 90% compared with control concrete as per DIN 1048 and resistant to 16 bar hydrostatic pressure on negative side. The crystalline slurry shall be capable of self-healing of cracks up to a width of 0.50mm. The work shall be carried out all complete as per specification and the direction of the engineerin- charge. The product performance shall carry guarantee for 10 years against any leakage.For horizontal surface one coat @1.10 kg per sqm.						
	Providing and applying integral crystalline slurry of hydrophilic in nature for waterproofing treatment to the						
	Bottom slab inside -STP	1	4.750	4.000			19.000
	Bottom slab inside -CTU	1	1.600	0.750			1.200
	Total						**20.200**
						Total Quantity in sqm	**20.200**
1.012	13.7.1						
	12 mm cement plaster finished with a floating coat of neat cement of mix:1:3 (1 cement : 3 fine sand)						
	FOR STP						
	Inside of walls	1	17.500		3.250		56.875
	Base slab inside	1	4.750	4.000			19.000
	Top slab bottom	1	4.750	4.000			19.000
	Total						**94.875**
	FOR CTU						
	Inside of wall	1	4.700		1.550		7.285
	Base slab inside	1	1.600	0.750			1.200
	Top slab bottom	1	1.600	0.750			1.200
	Total						**9.685**

Sl No	Specification	No	Length	Width	Depth	Cf	Quantity
	12 mm cement plaster finished with a floating coat of neat cement of mix:(DEDUCTION)						
	Manhole	-2	0.600	0.450			-0.540
	Total						**-0.540**
						Total Quantity in sqm	**104.020**
1.013	19.18.1						
	Supplying and fixing C.I with out frame for manholes:455 x 610 mm rectangular C.I cover (light duty) the weight of the cover to be no less than 23 kg						
	Supplying and fixing C.I with out frame for manholes: 455 x 610 mm rectangular C.I cover (light duty) the						
	Say	2					2.000
	Total						**2.000**
						Total Quantity in each	**2.000**
2	CIVIL COMPONENTS- RECEIVING CHAMBER						
2.001	2.6.1						
	Earth work in excavation by mechanical means (Hydraulic excavator)/manual means over areas (exceeding 30 cm in depth, 1.5 m in width as well as 10 sqm on plan) including disposal of excavated earth, lead up to 50 m and lift up to 1.5 m, disposed earth to be levelled and neatly dressed.All kinds of soil						
	Earth work in excavation by mechanical means (Hydraulic excavator)/manual means over areas (exceeding 30 cm in						
	For receving chamber -STP	1	5.300	5.300	2.600		73.034
	For receving chamber -CTU	1	1.600	1.100	0.500		0.880
	Total						**73.914**
						Total Quantity in cum	**73.914**
2.002	4.1.6						
	Providing and laying in position cement concrete of specified grade excluding the cost of centering and shuttering - All work up to plinth level:1:3:6 (1 cement : 3 coarse sand : 6 graded stone aggregate 40 mm nominal size)						
	Providing and laying in position cement concrete of specified grade excluding the cost of centering and						
	For receiving Chamber- STP	1	5.300	5.300	0.150		4.214
	For receiving Chamber-CTU	1	1.600	1.100	0.150		0.264
	Total						**4.478**
						Total Quantity in cum	**4.478**
2.003	OD21967/2022-2023						

Sl No	Specification	No	Length	Width	Depth	Cf	Quantity
	(Item 5.37.1+5.34.1) Providing and laying in position ready mixed M-25 grade concrete for reinforced cement concrete work, using cement content as per approved design mix, manufactured in fully automatic batching plant and transported to site of work in transit mixer for all leads, having continuous agitated mixer, manufactured as per mix design of specified grade for reinforced cement concrete work including pumping of R.M.C. from transit mixer to site of laying, excluding the cost of centering, shuttering finishing and reinforcement including cost of admixtures in recommended proportions as per IS: 9103 to accelerate/ retard setting of concrete, improve workability without impairing strength and durability as per direction of the Engineer - in -charge. Note:- Cement content considered in this item is @330 kg/cum. Excess /less cement used as per design mix is payable/recoverable separately. All wiork upto plinth level Extra for providing richer mixes at all floor levels. Note:- Excess/less cement over the specified cement content used is payable/ recoverable separately. Providing M-30 grade concrete instead of M-25 grade BMC/RMC. (Note:- Cement content considered in M-30 is @ 340 kg/cum). 						
	For receiving chamber - STP						
	Bottom slab	1	5.300	5.300	0.300		8.427
	Long wall	2	4.300	0.300	2.600		6.708
	Short wall	2	3.700	0.300	2.600		5.772
	Total						**20.907**
	For receiving chamber-CTU						
	Bottom slab	1	1.250	1.000	0.300		0.375
	Long wall	2	1.500	0.250	1.450		1.088
	Short wall	2	0.500	0.250	1.450		0.363
	Total						**1.826**
						Total Quantity in cum	**22.733**
2.004	5.37.1						
	Providing and laying in position ready mixed M-25 grade concrete for reinforced cement concrete work, using cement content as per approved design mix, manufactured in fully automatic batching plant and transported to site of work in transit mixer for all leads, having continuous agitated mixer, manufactured as per mix design of specified grade for reinforced cement concrete work including pumping of R.M.C. from transit mixer to site of laying, excluding the cost of centering, shuttering finishing and reinforcement including cost of admixtures in recommended proportions as per IS: 9103 to accelerate/ retard setting of concrete, improve workability without impairing strength and durability as per direction of the Engineer - in -charge. Note:- Cement content considered in this item is @330 kg/cum. Excess /less cement used as per design mix is payable/recoverable separately.All wiork upto plinth level						
	Providing and laying in position ready mixed M-25 grade concrete for reinforced cement concrete work, (DEDUCTION)						
	Manhole	-2	0.600	0.450	0.150		-0.081
	Total						**-0.081**
	Providing and laying in position ready mixed M-25 grade concrete for reinforced cement concrete work, using						

Sl No	Specification	No	Length	Width	Depth	Cf	Quantity
	Top slab -STP	1	4.300	4.300	0.150		2.774
	Top slab -CTU	1	1.250	1.000	0.150		0.188
	Total						**2.962**
						Total Quantity in cum	**2.881**
2.005	5.22.6						
	Steel reinforcement for R.C.C work including straightening, cutting, bending, placing in position and binding all complete upto plinth levelThermo - Mechanically Treated bars of grade Fe-500D or more						
	Steel reinforcement for R.C.C work including straightening, cutting, bending, placing in position						
	Quantity as per item no,3	1		22.740		120.000000	2728.800
	Quantity as per item no.4	1		2.880		100.000000	288.000
	Total						**3016.800**
						Total Quantity in kilogram	**3016.800**
2.006	4.12						
	Extra for providing and mixing water proofing material in cement concrete work in doses by weight of cement as per manufacturer's specification .						
	Extra for providing and mixing water proofing material in cement concrete work in doses by weight of cement as						
	Quantity as per item no,3	1		22.740		340.000000	7731.600
	Quantity as per item no.4	1		2.880		330.000000	950.400
	Total						**8682.000**
						Total Quantity in kg	**8682.000**
2.007	5.9.1						
	Centering and shuttering including strutting, etc. and removal of form for:Foundations, footings, bases of columns, etc for mass concrete						
	Centering and shuttering including strutting, etc. and removal of form for:						
	Bottom slab -STP	1	21.200		0.300		6.360
	Bottom slab - CTU	1	3.500		0.300		1.050
	Total						**7.410**
						Total Quantity in sqm	**7.410**
2.008	5.9.2						
	Centering and shuttering including strutting, etc. and removal of form for:Walls (any thickness) including attached pilasters, butteresses, plinth and string courses etc.						
	Centering and shuttering including strutting, etc. and removal of form for:						

Sl No	Specification	No	Length	Width	Depth	Cf	Quantity
	For walls outside-STP	2	8.600		2.600		44.720
	For walls inside-STP	2	7.400		2.600		38.480
	For walls outside- CTU	1	3.500		1.450		5.075
	For walls inside-CTU	1	2.500		1.450		3.625
	Total						**91.900**
						Total Quantity in sqm	**91.900**
2.009	5.9.3						
	Centering and shuttering including strutting, etc. and removal of form for:Suspended floors, roofs, landings, balconies and access platform						
	Centering and shuttering including strutting, etc. and removal of form for:						
	Top slab-STP	2	8.600		0.150		2.580
	Bottom portion - STP	1	3.700	3.700			13.690
	Top slab -CTU	1	3.500		0.150		0.525
	Bottom portion - CTU	1	1.000	0.500			0.500
	Total						**17.295**
						Total Quantity in sqm	**17.295**
2.010	2.25						
	Filling available excavated earth (excluding rock) in trenches, plinth, sides of foundation etc. in layers not exceeding 20 cm in depth, consolidating each deposited layer by ramming and watering, lead up to 50 m and lift up to 1.5 m.						
	Filling available excavated earth (excluding rock) in trenches, plinth, sides (DEDUCTION)						
	PCC	-1			4.470		-4.470
	Bottom slab	-1			8.810		-8.810
	Receiving chamber	-1			13.930		-13.930
	Top slab	-1			2.960		-2.960
	Total						**-30.170**
	Filling available excavated earth (excluding rock) in trenches, plinth, sides of foundation etc. in layers not						
	Quantity as per item 1	1			73.900		73.900
	Total						**73.900**
						Total Quantity in cum	**43.730**
2.011	22.23.1						

Sl No	Specification	No	Length	Width	Depth	Cf	Quantity
	Providing and applying integral crystalline slurry of hydrophilic in nature for waterproofing treatment to the RCC structures like retaining walls of the basement, water tanks, roof slabs, podiums, reservior, sewage & water treatment plant, tunnels / subway and bridge deck etc., prepared by mixing in the ratio of 5 : 2 (5 parts integral crystalline slurry : 2 parts water) for vertical surfaces and 3 : 1 (3 parts integral crystalline slurry : 1 part water) for horizontal surfaces and applying the same from negative (internal) side with the help of synthetic fiber brush. The material shall meet the requirements as specified in ACI-212-3R-2010 i.e by reducing permeability of concrete by more than 90% compared with control concrete as per DIN 1048 and resistant to 16 bar hydrostatic pressure on negative side. The crystalline slurry shall be capable of self-healing of cracks up to a width of 0.50mm. The work shall be carried out all complete as per specification and the direction of the engineerin- charge. The product performance shall carry guarantee for 10 years against any leakage.For vertical surface two coats @0.70 kg per sqm						
	Providing and applying integral crystalline slurry of hydrophilic in nature for waterproofing treatment to the						
	Inside of walls - STP	2	7.400		2.600		38.480
	Inside of walls - CTU	1	2.500		1.450		3.625
	Total						**42.105**
						Total Quantity in sqm	**42.105**
2.012	22.23.2						
	Providing and applying integral crystalline slurry of hydrophilic in nature for waterproofing treatment to the RCC structures like retaining walls of the basement, water tanks, roof slabs, podiums, reservior, sewage & water treatment plant, tunnels / subway and bridge deck etc., prepared by mixing in the ratio of 5 : 2 (5 parts integral crystalline slurry : 2 parts water) for vertical surfaces and 3 : 1 (3 parts integral crystalline slurry : 1 part water) for horizontal surfaces and applying the same from negative (internal) side with the help of synthetic fiber brush. The material shall meet the requirements as specified in ACI-212-3R-2010 i.e by reducing permeability of concrete by more than 90% compared with control concrete as per DIN 1048 and resistant to 16 bar hydrostatic pressure on negative side. The crystalline slurry shall be capable of self-healing of cracks up to a width of 0.50mm. The work shall be carried out all complete as per specification and the direction of the engineerin- charge. The product performance shall carry guarantee for 10 years against any leakage.For horizontal surface one coat @1.10 kg per sqm.						
	Providing and applying integral crystalline slurry of hydrophilic in nature for waterproofing treatment to the						
	Bottom slab inside -STP	1	3.700	3.700			13.690
	Bottom slab inside -CTU	1	1.000	0.500			0.500
	Total						**14.190**
						Total Quantity in sqm	**14.190**

Sl No	Specification	No	Length	Width	Depth	Cf	Quantity
2.013	13.7.1						
	12 mm cement plaster finished with a floating coat of neat cement of mix:1:3 (1 cement : 3 fine sand)						
	12 mm cement plaster finished with a floating coat of neat cement of mix:						
	Inside of walls - STP	2	7.400		2.600		38.480
	base slab inside - STP	1	3.700	3.700			13.690
	top slab bottom - STP	1	3.700	3.700			13.690
	Inside of walls - CTU	2	2.000		1.450		5.800
	base slab inside - CTU	1	1.000	0.500			0.500
	top slab bottom - CTU	1	1.000	0.500			0.500
	Total						**72.660**
						Total Quantity in sqm	**72.660**
2.014	19.18.1						
	Supplying and fixing C.I with out frame for manholes:455 x 610 mm rectangular C.I cover (light duty) the weight of the cover to be no less than 23 kg						
	Supplying and fixing C.I with out frame for manholes:						
		2					2.000
	Total						**2.000**
						Total Quantity in each	**2.000**
2.015	OD21968/2022-2023						
	Providing and fixing uPVC pipes & fittings includings jointing of pipes with one step uPVC solvent cement , testing of joints complete as per direction of Engineer in Charge. 110mm dia 6Kgf/cm²- for vent pipe						
	Providing and fixing uPVC pipes & fittings includings jointing of pipes with one step						

Sl No	Specification	No	Length	Width	Depth	Cf	Quantity
	Providing and fixing uPVC pipes & fittings includings jointing of pipes with one step uPVC solvent cement , testing of joints complete as per direction of Engineer in Charge. 110mm dia 6Kgf/cm²- for vent pipe	1	0.450				0.450
	Total						**0.450**
						Total Quantity in metre	**0.450**
3	CIVIL COMPONENTS - GRIT SEPARATOR AND SCREEN CHANNEL						
3.001	2.6.1						
	Earth work in excavation by mechanical means (Hydraulic excavator)/manual means over areas (exceeding 30 cm in depth, 1.5 m in width as well as 10 sqm on plan) including disposal of excavated earth, lead up to 50 m and lift up to 1.5 m, disposed earth to be levelled and neatly dressed.All kinds of soil						
	Earth work in excavation by mechanical means						
	For grit separator	1	5.500	5.500	1.300		39.325
	For screen channel -STP	2	13.000	3.350	0.500		43.550
	For screen channel -CTU	1	4.500	1.600	0.500		3.600
	Total						**86.475**
						Total Quantity in cum	**86.475**
3.002	4.1.6						
	Providing and laying in position cement concrete of specified grade excluding the cost of centering and shuttering - All work up to plinth level:1:3:6 (1 cement : 3 coarse sand : 6 graded stone aggregate 40 mm nominal size)						
	Providing and laying in position cement concrete of specified grade						
	For grit separator	1	5.500	5.500	0.150		4.538
	For screen channel -STP	2	13.000	3.350	0.150		13.065
	For screen channel -CTU	1	4.500	1.600	1.150		8.280
	Total						**25.883**
						Total Quantity in cum	**25.883**
3.003	OD21899/2022-2023						

Sl No	Specification	No	Length	Width	Depth	Cf	Quantity
	(Item 5.37.1+5.34.1) Providing and laying in position ready mixed M-25 grade concrete for reinforced cement concrete work, using cement content as per approved design mix, manufactured in fully automatic batching plant and transported to site of work in transit mixer for all leads, having continuous agitated mixer, manufactured as per mix design of specified grade for reinforced cement concrete work including pumping of R.M.C. from transit mixer to site of laying, excluding the cost of centering, shuttering finishing and reinforcement including cost of admixtures in recommended proportions as per IS: 9103 to accelerate/ retard setting of concrete, improve workability without impairing strength and durability as per direction of the Engineer - in -charge. Note:- Cement content considered in this item is @330 kg/cum. Excess /less cement used as per design mix is payable/recoverable separately. All wiork upto plinth level Extra for providing richer mixes at all floor levels. Note:- Excess/less cement over the specified cement content used is payable/ recoverable separately. Providing M-30 grade concrete instead of M-25 grade BMC/RMC. (Note:- Cement content considered in M-30 is @ 340 kg/cum). 						
	Deduction						
	Manhole	-1	0.600	0.450	0.150		-0.040
	Total						**-0.040**
	For grit seperator						
	Bottom slab	1	5.500	5.500	0.300		9.075
	walls	2	8.400	0.300	3.100		15.624
	Top slab	1	4.500	4.500	0.150		3.038
	Total						**27.737**
	Deduction						
	Manhole	-3	0.600	0.450	0.150		-0.121
	Total						**-0.121**
	For screen channel						
	Bottom slab STP	2	13.000	3.350	0.300		26.130
	Bottom slab CTU	1	4.500	1.600	0.300		2.160
	Wall STP	4	13.000	0.300	1.000		15.600
	Wall CTU	2	4.000	0.250	1.500		3.000
	Top Slab- STP	2	13.000	2.350	0.150		9.165
	Top Slab-CTU	1	4.000	1.100	0.150		0.660
	Total						**56.715**
						Total Quantity in cum	**84.291**
3.004	5.22.6						
	Steel reinforcement for R.C.C work including straightening, cutting, bending, placing in position and binding all complete upto plinth levelThermo - Mechanically Treated bars of grade Fe-500D or more						
	Steel reinforcement for R.C.C work including straightening, cutting, bending, placing in position and						

Sl No	Specification	No	Length	Width	Depth	Cf	Quantity
	Quantity as per item no,3	1		84.300		120.000000	10116.000
	Total						**10116.000**
						Total Quantity in kilogram	**10116.000**
3.005	4.12						
	Extra for providing and mixing water proofing material in cement concrete work in doses by weight of cement as per manufacturer's specification .						
	Extra for providing and mixing water proofing material in cement concrete work in doses by weight of cement						
	Quantity as per item no,3	1		84.300	340.000		28662.000
	Total						**28662.000**
						Total Quantity in kg	**28662.000**
3.006	5.9.1						
	Centering and shuttering including strutting, etc. and removal of form for:Foundations, footings, bases of columns, etc for mass concrete						
	Centering and shuttering including strutting, etc. and removal of form for:						
	Bottom slab-grit separator	2	11.000		0.300		6.600
	Bottom slab-screen channel-STP	4	13.000		0.300		15.600
	Bottom slab-screen channel-CTU	2	4.000		0.300		2.400
	Total						**24.600**
						Total Quantity in sqm	**24.600**
3.007	5.9.2						
	Centering and shuttering including strutting, etc. and removal of form for:Walls (any thickness) including attached pilasters, butteresses, plinth and string courses etc.						
	Centering and shuttering including strutting, etc. and removal of form for:						
	For walls outside -grit separator	2	9.000		3.100		55.800
	For walls inside - grit separator	2	7.800		3.100		48.360
	For walls outside -channel-STP	4	13.000		1.000		52.000
	For walls inside - channel-STP	4	13.000		1.000		52.000

Sl No	Specification	No	Length	Width	Depth	Cf	Quantity
	For walls outside -channel-CTU	2	4.000		1.500		12.000
	For walls inside - channel-CTU	2	4.000		1.500		12.000
	Total						**232.160**
						Total Quantity in sqm	**232.160**
3.008	5.9.3						
	Centering and shuttering including strutting, etc. and removal of form for:Suspended floors, roofs, landings, balconies and access platform						
	Centering and shuttering including strutting, etc. and removal of form for:						
	top slab-grit separator	2	9.000		0.150		2.700
	bottom portion-grit separator	1	3.900	3.900			15.210
	Top slab - channels -STP	4	13.000		0.150		7.800
	bottom portion - channels -STP	2	13.000	1.750			45.500
	Top slab - channels -CTU	2	4.000		0.150		1.200
	bottom portion - channels -CTU	1	4.000	0.600			2.400
	Total						**74.810**
						Total Quantity in sqm	**74.810**
3.009	22.23.1						
	Providing and applying integral crystalline slurry of hydrophilic in nature for waterproofing treatment to the RCC structures like retaining walls of the basement, water tanks, roof slabs, podiums, reservior, sewage & water treatment plant, tunnels / subway and bridge deck etc., prepared by mixing in the ratio of 5 : 2 (5 parts integral crystalline slurry : 2 parts water) for vertical surfaces and 3 : 1 (3 parts integral crystalline slurry : 1 part water) for horizontal surfaces and applying the same from negative (internal) side with the help of synthetic fiber brush. The material shall meet the requirements as specified in ACI-212-3R-2010 i.e by reducing permeability of concrete by more than 90% compared with control concrete as per DIN 1048 and resistant to 16 bar hydrostatic pressure on negative side. The crystalline slurry shall be capable of self-healing of cracks up to a width of 0.50mm. The work shall be carried out all complete as per specification and the direction of the engineerin- charge. The product performance shall carry guarantee for 10 years against any leakage.For vertical surface two coats @0.70 kg per sqm						
	Providing and applying integral crystalline slurry of hydrophilic in nature for waterproofing treatment						
	Inside of walls-grit separator	2	7.800		3.100		48.360

Sl No	Specification	No	Length	Width	Depth	Cf	Quantity
	Inside of walls-channels-STP	4	13.000		1.000		52.000
	Inside of walls-channels-CTU	2	4.000		1.500		12.000
	Total						**112.360**
						Total Quantity in sqm	**112.360**
3.010	22.23.2						
	Providing and applying integral crystalline slurry of hydrophilic in nature for waterproofing treatment to the RCC structures like retaining walls of the basement, water tanks, roof slabs, podiums, reservior, sewage & water treatment plant, tunnels / subway and bridge deck etc., prepared by mixing in the ratio of 5 : 2 (5 parts integral crystalline slurry : 2 parts water) for vertical surfaces and 3 : 1 (3 parts integral crystalline slurry : 1 part water) for horizontal surfaces and applying the same from negative (internal) side with the help of synthetic fiber brush. The material shall meet the requirements as specified in ACI-212-3R-2010 i.e by reducing permeability of concrete by more than 90% compared with control concrete as per DIN 1048 and resistant to 16 bar hydrostatic pressure on negative side. The crystalline slurry shall be capable of self-healing of cracks up to a width of 0.50mm. The work shall be carried out all complete as per specification and the direction of the engineerin- charge. The product performance shall carry guarantee for 10 years against any leakage.For horizontal surface one coat @1.10 kg per sqm.						
	Providing and applying integral crystalline slurry of hydrophilic in nature for waterproofing treatment						
	Bottom slab inside-grit box	1	3.900	3.900			15.210
	Bottom slab inside-channels-STP	2	13.000	1.750			45.500
	Bottom slab inside-channels-CTU	1	4.000	0.600			2.400
	Total						**63.110**
						Total Quantity in sqm	**63.110**
3.011	13.7.1						
	12 mm cement plaster finished with a floating coat of neat cement of mix:1:3 (1 cement : 3 fine sand)						
	Deduction						
	Manhole	-2	0.600	0.450			-0.540
	Total						**-0.540**
	12 mm cement plaster finished with a floating coat of neat cement of mix:						
	Inside of wall-grit separator	2	7.800		3.100		48.360
	Base slab inside - grit separator	1	3.900	3.900			15.210

Sl No	Specification	No	Length	Width	Depth	Cf	Quantity
	Top slab bottom - grit box	1	3.900	3.900			15.210
	Inside of wall-channels -STP	4	13.000		1.000		52.000
	Base slab inside - channels -STP	2	13.000	1.750			45.500
	Top slab bottom - channels -STP	2	13.000	1.750			45.500
	Inside of wall-channels -CTU	2	4.000		1.500		12.000
	Base slab inside - channels -CTU	1	4.000	0.600			2.400
	Top slab bottom - channels -CTU	1	4.000	0.600			2.400
	Total						**238.580**
						Total Quantity in sqm	**238.040**
3.012	19.18.1						
	Supplying and fixing C.I with out frame for manholes:455 x 610 mm rectangular C.I cover (light duty) the weight of the cover to be no less than 23 kg						
	Supplying and fixing C.I with out frame for manholes: 455 x 610 mm rectangular C.I cover (light duty)						
		1			3.000		3.000
	Total						**3.000**
						Total Quantity in each	**3.000**
4	CIVIL COMPONENTS - PRIMARY CLARIFIER AND EQUALISATION TANK						
4.001	2.6.1						
	Earth work in excavation by mechanical means (Hydraulic excavator)/manual means over areas (exceeding 30 cm in depth, 1.5 m in width as well as 10 sqm on plan) including disposal of excavated earth, lead up to 50 m and lift up to 1.5 m, disposed earth to be levelled and neatly dressed.All kinds of soil						
	Shape of tank 1 (Put 1 for rectangular and 2 for circular)						
	Equalisation tank	1	27.100	16.100	1.500		654.465
	Primary clarifier - circular	1	12.500	12.500	1.800	0.790000	222.188
	Total						**876.653**
						Total Quantity in cum	**876.653**
4.002	4.1.6						
	Providing and laying in position cement concrete of specified grade excluding the cost of centering and shuttering - All work up to plinth level:1:3:6 (1 cement : 3 coarse sand : 6 graded stone aggregate 40 mm nominal size)						
	Providing and laying in position cement concrete of specified grade excluding the cost of centering						

Sl No	Specification	No	Length	Width	Depth	Cf	Quantity
	Equalisation tank	1	27.100	27.100	0.150		110.162
	Primary clarifier - circular	1	12.500	12.500	0.150	0.790000	18.516
	Total						**128.678**
						Total Quantity in cum	**128.678**
4.003	OD21900/2022-2023						
	(Item 5.37.1+5.34.1) Providing and laying in position ready mixed M-25 grade concrete for reinforced cement concrete work, using cement content as per approved design mix, manufactured in fully automatic batching plant and transported to site of work in transit mixer for all leads, having continuous agitated mixer, manufactured as per mix design of specified grade for reinforced cement concrete work including pumping of R.M.C. from transit mixer to site of laying, excluding the cost of centering, shuttering finishing and reinforcement including cost of admixtures in recommended proportions as per IS: 9103 to accelerate/ retard setting of concrete, improve workability without impairing strength and durability as per direction of the Engineer - in -charge. Note:- Cement content considered in this item is @330 kg/cum. Excess /less cement used as per design mix is payable/recoverable separately. All wiork upto plinth level Extra for providing richer mixes at all floor levels. Note:- Excess/less cement over the specified cement content used is payable/ recoverable separately. Providing M-30 grade concrete instead of M-25 grade BMC/RMC. (Note:- Cement content considered in M-30 is @ 340 kg/cum). 						
	Deduction						
	Manhole	-1	0.600	0.450	0.150		-0.040
	Total						**-0.040**
	For equalisation tank						
	Bottom slab	1	27.100	27.100	0.300		220.323
	Long wall	2	26.600	0.300	3.900		62.244
	Short wall	2	15.000	0.300	3.900		35.100
	Top slab	1	26.600	15.600	0.150		62.244
	Total						**379.911**
	For primary clarifier						
	Bottom slab	1	12.500	12.500	0.300	0.790000	37.031
	Wall	1	11.500	0.300	3.900	3.140000	42.249
	Launder	1	10.600	0.450	0.150	3.140000	2.247
	Total						**81.527**
						Total Quantity in cum	**461.398**
4.004	5.22.6						

Sl No	Specification	No	Length	Width	Depth	Cf	Quantity
	Steel reinforcement for R.C.C work including straightening, cutting, bending, placing in position and binding all complete upto plinth levelThermo - Mechanically Treated bars of grade Fe-500D or more						
	Steel reinforcement for R.C.C work including straightening, cutting, bending, placing in position						
	Quantity as per item No:3	1		459.490		120.000000	55138.800
	Total						**55138.800**
						Total Quantity in kilogram	**55138.800**
4.005	4.12						
	Extra for providing and mixing water proofing material in cement concrete work in doses by weight of cement as per manufacturer's specification .						
	Extra for providing and mixing water proofing material in cement concrete work in doses by weight of cement						
	Quantity as per item No:3	1		459.490		340.000000	156226.600
	Total						**156226.600**
						Total Quantity in kg	**156226.600**
4.006	5.9.1						
	Centering and shuttering including strutting, etc. and removal of form for:Foundations, footings, bases of columns, etc for mass concrete						
	Centering and shuttering including strutting, etc. and removal of form for:						
	Bottom slab-ET	2	43.200		0.300		25.920
	Bottom slab-PC	1	12.500		0.350	3.140000	13.738
	Total						**39.658**
						Total Quantity in sqm	**39.658**
4.007	5.9.2						
	Centering and shuttering including strutting, etc. and removal of form for:Walls (any thickness) including attached pilasters, butteresses, plinth and string courses etc.						
	Equalisation tank						
	For walls outside	2	42.200		3.900		329.160
	For walls inside	2	41.000		3.900		319.800
	Total						**648.960**
						Total Quantity in sqm	**648.960**
4.008	5.9.3						

Sl No	Specification	No	Length	Width	Depth	Cf	Quantity
	Centering and shuttering including strutting, etc. and removal of form for:Suspended floors, roofs, landings, balconies and access platform						
	Centering and shuttering including strutting, etc. and removal of form for:						
	Top slab	1	42.200		0.150		6.330
	Bottom portion	1	26.000	15.000			390.000
	Total						**396.330**
						Total Quantity in sqm	**396.330**
4.009	22.23.1						
	Providing and applying integral crystalline slurry of hydrophilic in nature for waterproofing treatment to the RCC structures like retaining walls of the basement, water tanks, roof slabs, podiums, reservior, sewage & water treatment plant, tunnels / subway and bridge deck etc., prepared by mixing in the ratio of 5 : 2 (5 parts integral crystalline slurry : 2 parts water) for vertical surfaces and 3 : 1 (3 parts integral crystalline slurry : 1 part water) for horizontal surfaces and applying the same from negative (internal) side with the help of synthetic fiber brush. The material shall meet the requirements as specified in ACI-212-3R-2010 i.e by reducing permeability of concrete by more than 90% compared with control concrete as per DIN 1048 and resistant to 16 bar hydrostatic pressure on negative side. The crystalline slurry shall be capable of self-healing of cracks up to a width of 0.50mm. The work shall be carried out all complete as per specification and the direction of the engineerin- charge. The product performance shall carry guarantee for 10 years against any leakage.For vertical surface two coats @0.70 kg per sqm						
	Providing and applying integral crystalline slurry of hydrophilic in nature for waterproofing treatmen						
	Inside of walls-ET	2	41.000		3.900		319.800
	Inside of walls-PC	1	11.500		3.900	3.140000	140.829
	Total						**460.629**
						Total Quantity in sqm	**460.629**
4.010	22.23.2						
	Providing and applying integral crystalline slurry of hydrophilic in nature for waterproofing treatment to the RCC structures like retaining walls of the basement, water tanks, roof slabs, podiums, reservior, sewage & water treatment plant, tunnels / subway and bridge deck etc., prepared by mixing in the ratio of 5 : 2 (5 parts integral crystalline slurry : 2 parts water) for vertical surfaces and 3 : 1 (3 parts integral crystalline slurry : 1 part water) for horizontal surfaces and applying the same from negative (internal) side with the help of synthetic fiber brush. The material shall meet the requirements as specified in ACI-212-3R-2010 i.e by reducing permeability of concrete by more than 90% compared with control concrete as per DIN 1048 and resistant to 16 bar hydrostatic pressure on negative side. The crystalline slurry shall be capable of self-healing of cracks up to a width of 0.50mm. The work shall be carried out all complete as per specification and the direction of the engineerin- charge. The product performance shall carry guarantee for 10 years against any leakage.For horizontal surface one coat @1.10 kg per sqm.						

Sl No	Specification	No	Length	Width	Depth	Cf	Quantity
	Providing and applying integral crystalline slurry of hydrophilic in nature for waterproofing treatment						
	Bottom slab inside -ET	1	26.000	15.000			390.000
	Bottom slab inside -PC	1	12.500	12.500		0.790000	123.438
	Total						**513.438**
						Total Quantity in sqm	**513.438**
4.011	13.7.1						
	12 mm cement plaster finished with a floating coat of neat cement of mix:1:3 (1 cement : 3 fine sand)						
	Deduction						
	Manhole	-1	0.600	0.450			-0.270
	Total						**-0.270**
	12 mm cement plaster finished with a floating coat of neat cement of mix						
	Inside of walls-ET	2	41.000		3.900		319.800
	Base slab Inside -ET	1	26.000	15.000			390.000
	Top slab bottom -ET	1	26.000	15.000			390.000
	Clarifier walls	1	11.500		3.900	3.140000	140.829
	Total						**1240.629**
						Total Quantity in sqm	**1240.359**
4.012	19.18.1						
	Supplying and fixing C.I with out frame for manholes:455 x 610 mm rectangular C.I cover (light duty) the weight of the cover to be no less than 23 kg						
	Supplying and fixing C.I with out frame for manholes: 455 x 610 mm rectangular C.I cover (light duty)						
		1					1.000
	Total						**1.000**
						Total Quantity in each	**1.000**
4.013	OD21901/2022-2023						
	Providing and fixing uPVC pipes & fittings includings jointing of pipes with one step uPVC solvent cement , testing of joints complete as per direction of Engineer in Charge. 110mm dia 6Kgf/cm²- for vent pipe						
	Providing and fixing uPVC pipes & fittings includings jointing of pipes with one step uPVC solvent cement						

Sl No	Specification	No	Length	Width	Depth	Cf	Quantity
	Providing and fixing uPVC pipes & fittings includings jointing of pipes with one step uPVC solvent cement , testing of joints complete as per direction of Engineer in Charge. 110mm dia 6Kgf/cm²- for vent pipe	1	0.450				0.450
	Total						**0.450**
						Total Quantity in metre	**0.450**
5	CIVIL COMPONENTS - DILUTION TANK FOR CO-TRATMENT - RECTANGULAR						
5.001	2.6.1						
	Earth work in excavation by mechanical means (Hydraulic excavator)/manual means over areas (exceeding 30 cm in depth, 1.5 m in width as well as 10 sqm on plan) including disposal of excavated earth, lead up to 50 m and lift up to 1.5 m, disposed earth to be levelled and neatly dressed.All kinds of soil						
	Earth work in excavation by mechanical means (Hydraulic excavator)/manual means over areas						
	Dilution tank	1	5.400	5.400	0.600		17.496
	Total						**17.496**
						Total Quantity in cum	**17.496**
5.002	4.1.6						
	Providing and laying in position cement concrete of specified grade excluding the cost of centering and shuttering - All work up to plinth level:1:3:6 (1 cement : 3 coarse sand : 6 graded stone aggregate 40 mm nominal size)						
	Providing and laying in position cement concrete of specified grade excluding the cost of centering						
	Dilution tank	1	5.400	5.400	0.150		4.374
	Total						**4.374**
						Total Quantity in cum	**4.374**
5.003	OD21919/2022-2023						

Sl No	Specification	No	Length	Width	Depth	Cf	Quantity
	(Item 5.37.1+5.34.1) Providing and laying in position ready mixed M-25 grade concrete for reinforced cement concrete work, using cement content as per approved design mix, manufactured in fully automatic batching plant and transported to site of work in transit mixer for all leads, having continuous agitated mixer, manufactured as per mix design of specified grade for reinforced cement concrete work including pumping of R.M.C. from transit mixer to site of laying, excluding the cost of centering, shuttering finishing and reinforcement including cost of admixtures in recommended proportions as per IS: 9103 to accelerate/ retard setting of concrete, improve workability without impairing strength and durability as per direction of the Engineer - in -charge. Note:- Cement content considered in this item is @330 kg/cum. Excess /less cement used as per design mix is payable/recoverable separately. All wiork upto plinth level Extra for providing richer mixes at all floor levels. Note:- Excess/less cement over the specified cement content used is payable/ recoverable separately. Providing M-30 grade concrete instead of M-25 grade BMC/RMC. (Note:- Cement content considered in M-30 is @ 340 kg/cum). 						
	Dilution tank						
	Bottom slab	1	5.400	5.400	0.350		10.206
	Long wall	2	4.200	0.300	3.350		8.442
	Short wall	2	3.600	0.300	3.350		7.236
	Top slab	1	4.200	4.200	0.150		2.646
	Total						**28.530**
	Deduction						
	Manhole	-1	0.600	0.450	0.150		-0.040
	Total						**-0.040**
						Total Quantity in cum	**28.490**
5.004	5.22.6						
	Steel reinforcement for R.C.C work including straightening, cutting, bending, placing in position and binding all complete upto plinth levelThermo - Mechanically Treated bars of grade Fe-500D or more						
	Steel reinforcement for R.C.C work including straightening, cutting, bending, placing in position						
	Quantity as per item No:3	1		28.500	120.000		3420.000
	Total						**3420.000**
						Total Quantity in kilogram	**3420.000**
5.005	4.12						
	Extra for providing and mixing water proofing material in cement concrete work in doses by weight of cement as per manufacturer's specification .						
	Extra for providing and mixing water proofing material in cement concrete work in doses by weight of cemen						
	Quantity as per item No:3	1		28.500	340.000		9690.000
	Total						**9690.000**

Sl No	Specification	No	Length	Width	Depth	Cf	Quantity
						Total Quantity in kg	**9690.000**
5.006	5.9.1						
	Centering and shuttering including strutting, etc. and removal of form for:Foundations, footings, bases of columns, etc for mass concrete						
	Centering and shuttering including strutting, etc. and removal of form for:						
	Bottom slab	2	10.800		0.400		8.640
	Total						**8.640**
						Total Quantity in sqm	**8.640**
5.007	5.9.2						
	Centering and shuttering including strutting, etc. and removal of form for:Walls (any thickness) including attached pilasters, butteresses, plinth and string courses etc.						
	Centering and shuttering including strutting, etc. and removal of form for:						
	For walls outside	2	8.400		3.350		56.280
	For walls inside	2	7.200		3.350		48.240
	Total						**104.520**
						Total Quantity in sqm	**104.520**
5.008	5.9.3						
	Centering and shuttering including strutting, etc. and removal of form for:Suspended floors, roofs, landings, balconies and access platform						
	Centering and shuttering including strutting, etc. and removal of form for:						
	Top slab	1	8.400		0.150		1.260
	Bottom portion	1	3.600	3.600			12.960
	Total						**14.220**
						Total Quantity in sqm	**14.220**
5.009	22.23.1						
	Providing and applying integral crystalline slurry of hydrophilic in nature for waterproofing treatment to the RCC structures like retaining walls of the basement, water tanks, roof slabs, podiums, reservior, sewage & water treatment plant, tunnels / subway and bridge deck etc., prepared by mixing in the ratio of 5 : 2 (5 parts integral crystalline slurry : 2 parts water) for vertical surfaces and 3 : 1 (3 parts integral crystalline slurry : 1 part water) for horizontal surfaces and applying the same from negative (internal) side with the help of synthetic fiber brush. The material shall meet the requirements as specified in ACI-212-3R-2010 i.e by reducing permeability of concrete by more than 90% compared with control concrete as per DIN 1048 and resistant to 16 bar hydrostatic pressure on negative side. The crystalline slurry shall be capable of self-healing of cracks up to a width of 0.50mm. The work shall be carried out all complete as per specification and the direction of the engineerin- charge. The product performance shall carry guarantee for 10 years against any leakage.For vertical surface two coats @0.70 kg per sqm						
	Providing and applying integral crystalline slurry of hydrophilic in nature for waterproofing treatment						

Sl No	Specification	No	Length	Width	Depth	Cf	Quantity
	Inside of walls	2	7.200		3.350		48.240
	Total						**48.240**
						Total Quantity in sqm	**48.240**
5.010	22.23.2						
	Providing and applying integral crystalline slurry of hydrophilic in nature for waterproofing treatment to the RCC structures like retaining walls of the basement, water tanks, roof slabs, podiums, reservior, sewage & water treatment plant, tunnels / subway and bridge deck etc., prepared by mixing in the ratio of 5 : 2 (5 parts integral crystalline slurry : 2 parts water) for vertical surfaces and 3 : 1 (3 parts integral crystalline slurry : 1 part water) for horizontal surfaces and applying the same from negative (internal) side with the help of synthetic fiber brush. The material shall meet the requirements as specified in ACI-212-3R-2010 i.e by reducing permeability of concrete by more than 90% compared with control concrete as per DIN 1048 and resistant to 16 bar hydrostatic pressure on negative side. The crystalline slurry shall be capable of self-healing of cracks up to a width of 0.50mm. The work shall be carried out all complete as per specification and the direction of the engineerin- charge. The product performance shall carry guarantee for 10 years against any leakage.For horizontal surface one coat @1.10 kg per sqm.						
	Providing and applying integral crystalline slurry of hydrophilic in nature for waterproofing treatment						
	Bottom slab inside	1	3.600	3.600			12.960
	Total						**12.960**
						Total Quantity in sqm	**12.960**
5.011	13.7.1						
	12 mm cement plaster finished with a floating coat of neat cement of mix:1:3 (1 cement : 3 fine sand)						
	Deduction						
	Manhole	-1	0.600	0.450			-0.270
	Total						**-0.270**
	12 mm cement plaster finished with a floating coat of neat cement of mix:						
	Inside of walls	2	7.200		3.350		48.240
	Base slab Inside	1	3.600	3.600			12.960
	Top slab bottom	1	3.600	3.600			12.960
	Total						**74.160**
						Total Quantity in sqm	**73.890**
5.012	19.18.1						
	Supplying and fixing C.I with out frame for manholes:455 x 610 mm rectangular C.I cover (light duty) the weight of the cover to be no less than 23 kg						
	Supplying and fixing C.I with out frame for manholes: 455 x 610 mm rectangular C.I cover (light duty)						
		1					1.000

Sl No	Specification	No	Length	Width	Depth	Cf	Quantity
	Total						**1.000**
						Total Quantity in each	**1.000**
5.013	OD21920/2022-2023						
	Providing and fixing uPVC pipes & fittings includings jointing of pipes with one step uPVC solvent cement , testing of joints complete as per direction of Engineer in Charge. 110mm dia 6Kgf/cm²- for vent pipe						
	Providing and fixing uPVC pipes & fittings includings jointing of pipes with one step						
	Providing and fixing uPVC pipes & fittings includings jointing of pipes with one step uPVC solvent cement , testing of joints complete as per direction of Engineer in Charge. 110mm dia 6Kgf/cm²- for vent pipe	1	0.450				0.450
	Total						**0.450**
						Total Quantity in metre	**0.450**
6	CIVIL COMPONENTS - MBBR TANK FOR BOD REMOVAL						
6.001	2.6.1						
	Earth work in excavation by mechanical means (Hydraulic excavator)/manual means over areas (exceeding 30 cm in depth, 1.5 m in width as well as 10 sqm on plan) including disposal of excavated earth, lead up to 50 m and lift up to 1.5 m, disposed earth to be levelled and neatly dressed.All kinds of soil						
	Earth work in excavation by mechanical means (Hydraulic excavator)/manual means over areas (						
	MBBR Tank-base	1	18.000	18.000	1.500		486.000
	Total						**486.000**
						Total Quantity in cum	**486.000**
6.002	OD21902/2022-2023						

DRAFT

Sl No	Specification	No	Length	Width	Depth	Cf	Quantity
	(Item 5.37.1+5.34.1) Providing and laying in position ready mixed M-25 grade concrete for reinforced cement concrete work, using cement content as per approved design mix, manufactured in fully automatic batching plant and transported to site of work in transit mixer for all leads, having continuous agitated mixer, manufactured as per mix design of specified grade for reinforced cement concrete work including pumping of R.M.C. from transit mixer to site of laying, excluding the cost of centering, shuttering finishing and reinforcement including cost of admixtures in recommended proportions as per IS: 9103 to accelerate/ retard setting of concrete, improve workability without impairing strength and durability as per direction of the Engineer - in -charge. Note:- Cement content considered in this item is @330 kg/cum. Excess /less cement used as per design mix is payable/recoverable separately. All wiork upto plinth level Extra for providing richer mixes at all floor levels. Note:- Excess/less cement over the specified cement content used is payable/ recoverable separately. Providing M-30 grade concrete instead of M-25 grade BMC/RMC. (Note:- Cement content considered in M-30 is @ 340 kg/cum). 						
	Providing and laying in position ready mixed M-25 grade concrete for reinforced cement concrete work,						
	Base slab	1	18.000	18.000	0.350		113.400
	Tank wall	2	34.400	0.300	4.100		84.624
	Total						**198.024**
						Total Quantity in cum	**198.024**
6.003	5.22.6						
	Steel reinforcement for R.C.C work including straightening, cutting, bending, placing in position and binding all complete upto plinth levelThermo - Mechanically Treated bars of grade Fe-500D or more						
	Steel reinforcement for R.C.C work including straightening, cutting, bending, placing in position and binding all						
	Quantity as per item No; 2	1	198.020	120.000			23762.400
	Total						**23762.400**
						Total Quantity in kilogram	**23762.400**
6.004	4.12						
	Extra for providing and mixing water proofing material in cement concrete work in doses by weight of cement as per manufacturer's specification .						
	Extra for providing and mixing water proofing material in cement concrete work in doses by weight of cement						
	Quantity as per item No: 2	1		198.020		340.000000	67326.800
	Total						**67326.800**
						Total Quantity in kg	**67326.800**

Sl No	Specification	No	Length	Width	Depth	Cf	Quantity
6.005	5.9.1						
	Centering and shuttering including strutting, etc. and removal of form for:Foundations, footings, bases of columns, etc for mass concrete						
	Centering and shuttering including strutting, etc. and removal of form for:						
	Bottom slab	2	35.000		0.350		24.500
	Total						**24.500**
						Total Quantity in sqm	**24.500**
6.006	5.9.2						
	Centering and shuttering including strutting, etc. and removal of form for:Walls (any thickness) including attached pilasters, butteresses, plinth and string courses etc.						
	Centering and shuttering including strutting, etc. and removal of form fo						
	For walls outside	2	35.000	4.100			287.000
	For walls inside	2	33.800	4.100			277.160
	Total						**564.160**
						Total Quantity in sqm	**564.160**
6.007	22.23.1						
	Providing and applying integral crystalline slurry of hydrophilic in nature for waterproofing treatment to the RCC structures like retaining walls of the basement, water tanks, roof slabs, podiums, reservior, sewage & water treatment plant, tunnels / subway and bridge deck etc., prepared by mixing in the ratio of 5 : 2 (5 parts integral crystalline slurry : 2 parts water) for vertical surfaces and 3 : 1 (3 parts integral crystalline slurry : 1 part water) for horizontal surfaces and applying the same from negative (internal) side with the help of synthetic fiber brush. The material shall meet the requirements as specified in ACI-212-3R-2010 i.e by reducing permeability of concrete by more than 90% compared with control concrete as per DIN 1048 and resistant to 16 bar hydrostatic pressure on negative side. The crystalline slurry shall be capable of self-healing of cracks up to a width of 0.50mm. The work shall be carried out all complete as per specification and the direction of the engineerin- charge. The product performance shall carry guarantee for 10 years against any leakage.For vertical surface two coats @0.70 kg per sqm						
	Providing and applying integral crystalline slurry of hydrophilic in nature for waterproofing treatment						
	Inside of walls	2	33.800		4.100		277.160
	Total						**277.160**
						Total Quantity in sqm	**277.160**
6.008	22.23.2						

Sl No	Specification	No	Length	Width	Depth	Cf	Quantity
	Providing and applying integral crystalline slurry of hydrophilic in nature for waterproofing treatment to the RCC structures like retaining walls of the basement, water tanks, roof slabs, podiums, reservior, sewage & water treatment plant, tunnels / subway and bridge deck etc., prepared by mixing in the ratio of 5 : 2 (5 parts integral crystalline slurry : 2 parts water) for vertical surfaces and 3 : 1 (3 parts integral crystalline slurry : 1 part water) for horizontal surfaces and applying the same from negative (internal) side with the help of synthetic fiber brush. The material shall meet the requirements as specified in ACI-212-3R-2010 i.e by reducing permeability of concrete by more than 90% compared with control concrete as per DIN 1048 and resistant to 16 bar hydrostatic pressure on negative side. The crystalline slurry shall be capable of self-healing of cracks up to a width of 0.50mm. The work shall be carried out all complete as per specification and the direction of the engineerin- charge. The product performance shall carry guarantee for 10 years against any leakage.For horizontal surface one coat @1.10 kg per sqm.						
	Providing and applying integral crystalline slurry of hydrophilic in nature for waterproofing treatment						
	Bottom slab inside	1	16.900	16.900			285.610
	Total						**285.610**
						Total Quantity in sqm	**285.610**
6.009	13.7.1						
	12 mm cement plaster finished with a floating coat of neat cement of mix:1:3 (1 cement : 3 fine sand)						
	12 mm cement plaster finished with a floating coat of neat cement of mix:						
	Inside of walls	2	33.800		4.100		277.160
	Base slab Inside	1	16.900	16.900			285.610
	Total						**562.770**
						Total Quantity in sqm	**562.770**
7	CIVIL COMPONENTS - MBBR TANK FOR NITRIFICATION						
7.001	2.6.1						
	Earth work in excavation by mechanical means (Hydraulic excavator)/manual means over areas (exceeding 30 cm in depth, 1.5 m in width as well as 10 sqm on plan) including disposal of excavated earth, lead up to 50 m and lift up to 1.5 m, disposed earth to be levelled and neatly dressed.All kinds of soil						
	Earth work in excavation by mechanical means (Hydraulic excavator)/manual means over areas						
	MBBR Tank-base	1	18.500	18.500	1.300		444.925
	Total						**444.925**
						Total Quantity in cum	**444.925**
7.002	4.1.6						

Sl No	Specification	No	Length	Width	Depth	Cf	Quantity
	Providing and laying in position cement concrete of specified grade excluding the cost of centering and shuttering - All work up to plinth level:1:3:6 (1 cement : 3 coarse sand : 6 graded stone aggregate 40 mm nominal size)						
	Providing and laying in position cement concrete of specified grade excluding the cost of centering						
	MBBR Tank	1	18.500	18.500	0.150		51.338
	Total						**51.338**
						Total Quantity in cum	**51.338**
7.003	OD21916/2022-2023						
	(Item 5.37.1+5.34.1) Providing and laying in position ready mixed M-25 grade concrete for reinforced cement concrete work, using cement content as per approved design mix, manufactured in fully automatic batching plant and transported to site of work in transit mixer for all leads, having continuous agitated mixer, manufactured as per mix design of specified grade for reinforced cement concrete work including pumping of R.M.C. from transit mixer to site of laying, excluding the cost of centering, shuttering finishing and reinforcement including cost of admixtures in recommended proportions as per IS: 9103 to accelerate/ retard setting of concrete, improve workability without impairing strength and durability as per direction of the Engineer - in -charge. Note:- Cement content considered in this item is @330 kg/cum. Excess /less cement used as per design mix is payable/recoverable separately. All wiork upto plinth level Extra for providing richer mixes at all floor levels. Note:- Excess/less cement over the specified cement content used is payable/ recoverable separately. Providing M-30 grade concrete instead of M-25 grade BMC/RMC. (Note:- Cement content considered in M-30 is @ 340 kg/cum). 						
	Providing and laying in position ready mixed M-25 grade concrete for reinforced cement						
	Base slab	1	18.500	18.500	0.350		119.788
	Tank walls	2	34.800	0.300	4.100		85.608
	Total						**205.396**
						Total Quantity in cum	**205.396**
7.004	5.22.6						
	Steel reinforcement for R.C.C work including straightening, cutting, bending, placing in position and binding all complete upto plinth levelThermo - Mechanically Treated bars of grade Fe-500D or more						
	Steel reinforcement for R.C.C work including straightening, cutting, bending, placing in position						
	Quatity as per item No: 2	1		205.400	120.000		24648.000
	Total						**24648.000**
						Total Quantity in kilogram	**24648.000**
7.005	4.12						

Sl No	Specification	No	Length	Width	Depth	Cf	Quantity
	Extra for providing and mixing water proofing material in cement concrete work in doses by weight of cement as per manufacturer's specification .						
	Extra for providing and mixing water proofing material in cement concrete work in doses by weight of cement						
	Quantity as per item No:2	1		205.400	340.000		69836.000
	Total						**69836.000**
						Total Quantity in kg	**69836.000**
7.006	5.9.1						
	Centering and shuttering including strutting, etc. and removal of form for:Foundations, footings, bases of columns, etc for mass concrete						
	Centering and shuttering including strutting, etc. and removal of form for:						
	Bottom slab	2	37.000	0.350			25.900
	Total						**25.900**
						Total Quantity in sqm	**25.900**
7.007	5.9.2						
	Centering and shuttering including strutting, etc. and removal of form for:Walls (any thickness) including attached pilasters, butteresses, plinth and string courses etc.						
	Centering and shuttering including strutting, etc. and removal of form for:						
	For walls outside	2	36.000	4.100			295.200
	For walls inside	2	34.800	4.100			285.360
	Total						**580.560**
						Total Quantity in sqm	**580.560**
7.008	22.23.1						
	Providing and applying integral crystalline slurry of hydrophilic in nature for waterproofing treatment to the RCC structures like retaining walls of the basement, water tanks, roof slabs, podiums, reservior, sewage & water treatment plant, tunnels / subway and bridge deck etc., prepared by mixing in the ratio of 5 : 2 (5 parts integral crystalline slurry : 2 parts water) for vertical surfaces and 3 : 1 (3 parts integral crystalline slurry : 1 part water) for horizontal surfaces and applying the same from negative (internal) side with the help of synthetic fiber brush. The material shall meet the requirements as specified in ACI-212-3R-2010 i.e by reducing permeability of concrete by more than 90% compared with control concrete as per DIN 1048 and resistant to 16 bar hydrostatic pressure on negative side. The crystalline slurry shall be capable of self-healing of cracks up to a width of 0.50mm. The work shall be carried out all complete as per specification and the direction of the engineerin- charge. The product performance shall carry guarantee for 10 years against any leakage.For vertical surface two coats @0.70 kg per sqm						
	Providing and applying integral crystalline slurry of hydrophilic in nature for waterproofing treatment						

Sl No	Specification	No	Length	Width	Depth	Cf	Quantity
	Inside of walls	2	34.800		4.100		285.360
	Total						**285.360**
						Total Quantity in sqm	**285.360**
7.009	22.23.2						
	Providing and applying integral crystalline slurry of hydrophilic in nature for waterproofing treatment to the RCC structures like retaining walls of the basement, water tanks, roof slabs, podiums, reservior, sewage & water treatment plant, tunnels / subway and bridge deck etc., prepared by mixing in the ratio of 5 : 2 (5 parts integral crystalline slurry : 2 parts water) for vertical surfaces and 3 : 1 (3 parts integral crystalline slurry : 1 part water) for horizontal surfaces and applying the same from negative (internal) side with the help of synthetic fiber brush. The material shall meet the requirements as specified in ACI-212-3R-2010 i.e by reducing permeability of concrete by more than 90% compared with control concrete as per DIN 1048 and resistant to 16 bar hydrostatic pressure on negative side. The crystalline slurry shall be capable of self-healing of cracks up to a width of 0.50mm. The work shall be carried out all complete as per specification and the direction of the engineerin- charge. The product performance shall carry guarantee for 10 years against any leakage.For horizontal surface one coat @1.10 kg per sqm.						
	Providing and applying integral crystalline slurry of hydrophilic in nature for waterproofing treatment						
	Bottom slab inside	1	17.400	17.400			302.760
	Total						**302.760**
						Total Quantity in sqm	**302.760**
7.010	13.7.1						
	12 mm cement plaster finished with a floating coat of neat cement of mix:1:3 (1 cement : 3 fine sand)						
	12 mm cement plaster finished with a floating coat of neat cement of mix:						
	Inside of walls	2	34.800		4.100		285.360
	Base slab Inside	1	17.400	17.400			302.760
	Total						**588.120**
						Total Quantity in sqm	**588.120**
8	CIVIL COMPONENTS - MBBR TANK FOR POST ANOXIC DE-NITRIFIACTION						
8.001	2.6.1						
	Earth work in excavation by mechanical means (Hydraulic excavator)/manual means over areas (exceeding 30 cm in depth, 1.5 m in width as well as 10 sqm on plan) including disposal of excavated earth, lead up to 50 m and lift up to 1.5 m, disposed earth to be levelled and neatly dressed.All kinds of soil						
	Earth work in excavation by mechanical means (Hydraulic excavator)/manual means over areas						
	MBBR Tank base	1	14.400	14.400	1.300		269.568
	Total						**269.568**

Sl No	Specification	No	Length	Width	Depth	Cf	Quantity
						Total Quantity in cum	**269.568**
8.002	4.1.6						
	Providing and laying in position cement concrete of specified grade excluding the cost of centering and shuttering - All work up to plinth level:1:3:6 (1 cement : 3 coarse sand : 6 graded stone aggregate 40 mm nominal size)						
	Providing and laying in position cement concrete of specified grade excluding the cost of centering						
	MBBR Tank base	1	14.400	14.400	0.150		31.104
	Total						**31.104**
						Total Quantity in cum	**31.104**
8.003	OD21918/2022-2023						
	(Item 5.37.1+5.34.1) Providing and laying in position ready mixed M-25 grade concrete for reinforced cement concrete work, using cement content as per approved design mix, manufactured in fully automatic batching plant and transported to site of work in transit mixer for all leads, having continuous agitated mixer, manufactured as per mix design of specified grade for reinforced cement concrete work including pumping of R.M.C. from transit mixer to site of laying, excluding the cost of centering, shuttering finishing and reinforcement including cost of admixtures in recommended proportions as per IS: 9103 to accelerate/ retard setting of concrete, improve workability without impairing strength and durability as per direction of the Engineer - in -charge. Note:- Cement content considered in this item is @330 kg/cum. Excess /less cement used as per design mix is payable/recoverable separately. All wiork upto plinth level Extra for providing richer mixes at all floor levels. Note:- Excess/less cement over the specified cement content used is payable/ recoverable separately. Providing M-30 grade concrete instead of M-25 grade BMC/RMC. (Note:- Cement content considered in M-30 is @ 340 kg/cum). 						
	Providing and laying in position ready mixed M-25 grade concrete for reinforced cement						
	Base slab	1	14.400	14.400	0.300		62.208
	Cover slab with central beam	1	13.900	13.900	0.150		28.982
	central beams of cover slab	2	13.300	0.300	0.300		2.394
	tank walls	2	27.200	0.300	4.100		66.912
	Total						**160.496**
						Total Quantity in cum	**160.496**
8.004	5.22.6						
	Steel reinforcement for R.C.C work including straightening, cutting, bending, placing in position and binding all complete upto plinth levelThermo - Mechanically Treated bars of grade Fe-500D or more						
	Steel reinforcement for R.C.C work including straightening, cutting, bending, placing in position						

Sl No	Specification	No	Length	Width	Depth	Cf	Quantity
	Quantity as per No:2	1		160.500		120.000000	19260.000
	Total						**19260.000**
						Total Quantity in kilogram	**19260.000**
8.005	4.12						
	Extra for providing and mixing water proofing material in cement concrete work in doses by weight of cement as per manufacturer's specification .						
	Extra for providing and mixing water proofing material in cement concrete work in doses by weight of cement						
	QUntity as per item No:2	1		160.500		340.000000	54570.000
	Total						**54570.000**
						Total Quantity in kg	**54570.000**
8.006	5.9.1						
	Centering and shuttering including strutting, etc. and removal of form for:Foundations, footings, bases of columns, etc for mass concrete						
	Centering and shuttering including strutting, etc. and removal of form for:						
	Bottom slab	2	26.600		0.300		15.960
	Total						**15.960**
						Total Quantity in sqm	**15.960**
8.007	5.9.2						
	Centering and shuttering including strutting, etc. and removal of form for:Walls (any thickness) including attached pilasters, butteresses, plinth and string courses etc.						
	Centering and shuttering including strutting, etc. and removal of form for:						
	For walls outside	2	13.900		4.100		113.980
	For walls inside	2	13.300		4.100		109.060
	Top slab	1	13.300	13.300			176.890
	Top beams	2	13.300		0.900		23.940
	Total						**423.870**
						Total Quantity in sqm	**423.870**
8.008	22.23.1						

Sl No	Specification	No	Length	Width	Depth	Cf	Quantity
	Providing and applying integral crystalline slurry of hydrophilic in nature for waterproofing treatment to the RCC structures like retaining walls of the basement, water tanks, roof slabs, podiums, reservior, sewage & water treatment plant, tunnels / subway and bridge deck etc., prepared by mixing in the ratio of 5 : 2 (5 parts integral crystalline slurry : 2 parts water) for vertical surfaces and 3 : 1 (3 parts integral crystalline slurry : 1 part water) for horizontal surfaces and applying the same from negative (internal) side with the help of synthetic fiber brush. The material shall meet the requirements as specified in ACI-212-3R-2010 i.e by reducing permeability of concrete by more than 90% compared with control concrete as per DIN 1048 and resistant to 16 bar hydrostatic pressure on negative side. The crystalline slurry shall be capable of self-healing of cracks up to a width of 0.50mm. The work shall be carried out all complete as per specification and the direction of the engineerin- charge. The product performance shall carry guarantee for 10 years against any leakage.For vertical surface two coats @0.70 kg per sqm						
	Providing and applying integral crystalline slurry of hydrophilic in nature for waterproofing treatment						
	Inside of walls	2	26.600		4.100		218.120
	Top slab	1	13.300	13.300			176.890
	Top beams	2	13.300		0.900		23.940
	Total						**418.950**
						Total Quantity in sqm	**418.950**
8.009	22.23.2						
	Providing and applying integral crystalline slurry of hydrophilic in nature for waterproofing treatment to the RCC structures like retaining walls of the basement, water tanks, roof slabs, podiums, reservior, sewage & water treatment plant, tunnels / subway and bridge deck etc., prepared by mixing in the ratio of 5 : 2 (5 parts integral crystalline slurry : 2 parts water) for vertical surfaces and 3 : 1 (3 parts integral crystalline slurry : 1 part water) for horizontal surfaces and applying the same from negative (internal) side with the help of synthetic fiber brush. The material shall meet the requirements as specified in ACI-212-3R-2010 i.e by reducing permeability of concrete by more than 90% compared with control concrete as per DIN 1048 and resistant to 16 bar hydrostatic pressure on negative side. The crystalline slurry shall be capable of self-healing of cracks up to a width of 0.50mm. The work shall be carried out all complete as per specification and the direction of the engineerin- charge. The product performance shall carry guarantee for 10 years against any leakage.For horizontal surface one coat @1.10 kg per sqm.						
	Providing and applying integral crystalline slurry of hydrophilic in nature for waterproofing treatment						
	Bottom slab inside	1	13.300	13.300			176.890
	Total						**176.890**
						Total Quantity in sqm	**176.890**
8.010	13.7.1						

Sl No	Specification	No	Length	Width	Depth	Cf	Quantity
	12 mm cement plaster finished with a floating coat of neat cement of mix:1:3 (1 cement : 3 fine sand)						
	12 mm cement plaster finished with a floating coat of neat cement of mix:						
	Inside of walls	2	26.600		4.100		218.120
	Base slab inside	1	13.300	13.300			176.890
	Total						**395.010**
						Total Quantity in sqm	**395.010**
9	CIVIL COMPONENTS -MBBR TANK FOR CHAMBER AFTER DE-NITRIFICATION						
9.001	2.6.1						
	Earth work in excavation by mechanical means (Hydraulic excavator)/manual means over areas (exceeding 30 cm in depth, 1.5 m in width as well as 10 sqm on plan) including disposal of excavated earth, lead up to 50 m and lift up to 1.5 m, disposed earth to be levelled and neatly dressed.All kinds of soil						
	Earth work in excavation by mechanical means						
	MBBR TANK-BASE	1	9.100	9.100	0.900		74.529
	Total						**74.529**
						Total Quantity in cum	**74.529**
9.002	4.1.6						
	Providing and laying in position cement concrete of specified grade excluding the cost of centering and shuttering - All work up to plinth level:1:3:6 (1 cement : 3 coarse sand : 6 graded stone aggregate 40 mm nominal size)						
	Providing and laying in position cement concrete of specified grade excluding the cost of centering and						
	MBBR TANK-BASE	1	9.100	9.100	0.150		12.422
	Total						**12.422**
						Total Quantity in cum	**12.422**
9.003	OD21917/2022-2023						

Sl No	Specification	No	Length	Width	Depth	Cf	Quantity
	(Item 5.37.1+5.34.1) Providing and laying in position ready mixed M-25 grade concrete for reinforced cement concrete work, using cement content as per approved design mix, manufactured in fully automatic batching plant and transported to site of work in transit mixer for all leads, having continuous agitated mixer, manufactured as per mix design of specified grade for reinforced cement concrete work including pumping of R.M.C. from transit mixer to site of laying, excluding the cost of centering, shuttering finishing and reinforcement including cost of admixtures in recommended proportions as per IS: 9103 to accelerate/ retard setting of concrete, improve workability without impairing strength and durability as per direction of the Engineer - in -charge. Note:- Cement content considered in this item is @330 kg/cum. Excess /less cement used as per design mix is payable/recoverable separately. All wiork upto plinth level Extra for providing richer mixes at all floor levels. Note:- Excess/less cement over the specified cement content used is payable/ recoverable separately. Providing M-30 grade concrete instead of M-25 grade BMC/RMC. (Note:- Cement content considered in M-30 is @ 340 kg/cum). 						
	Providing and laying in position ready mixed M-25 grade concrete for reinforced cement						
	Base slab	1	9.100	9.100	0.350		28.984
	Tank walls	2	16.600	0.300	4.100		40.836
	Total						**69.820**
						Total Quantity in cum	**69.820**
9.004	5.22.6						
	Steel reinforcement for R.C.C work including straightening, cutting, bending, placing in position and binding all complete upto plinth levelThermo - Mechanically Treated bars of grade Fe-500D or more						
	Steel reinforcement for R.C.C work including straightening,						
	QUANITY AS PER ITEM NUMBER TWO	1		69.820		120.000000	8378.400
	Total						**8378.400**
						Total Quantity in kilogram	**8378.400**
9.005	4.12						
	Extra for providing and mixing water proofing material in cement concrete work in doses by weight of cement as per manufacturer's specification .						
	Extra for providing and mixing water proofing material in cement concrete work in doses by weight of cement as per						
	quanity as per item number two	1		69.820		340.000000	23738.800
	Total						**23738.800**
						Total Quantity in kg	**23738.800**
9.006	5.9.1						

Sl No	Specification	No	Length	Width	Depth	Cf	Quantity
	Centering and shuttering including strutting, etc. and removal of form for:Foundations, footings, bases of columns, etc for mass concrete						
	Centering and shuttering including strutting, etc. and removal of form for:						
	bottom slab	2	18.200		0.450		16.380
	Total						**16.380**
						Total Quantity in sqm	**16.380**
9.007	5.9.2						
	Centering and shuttering including strutting, etc. and removal of form for:Walls (any thickness) including attached pilasters, butteresses, plinth and string courses etc.						
	Centering and shuttering including strutting, etc. and removal of form for:						
	for walls outside	2	17.200		4.100		141.040
	for walls inside	2	16.000		4.100		131.200
	Total						**272.240**
						Total Quantity in sqm	**272.240**
9.008	22.23.1						
	Providing and applying integral crystalline slurry of hydrophilic in nature for waterproofing treatment to the RCC structures like retaining walls of the basement, water tanks, roof slabs, podiums, reservior, sewage & water treatment plant, tunnels / subway and bridge deck etc., prepared by mixing in the ratio of 5 : 2 (5 parts integral crystalline slurry : 2 parts water) for vertical surfaces and 3 : 1 (3 parts integral crystalline slurry : 1 part water) for horizontal surfaces and applying the same from negative (internal) side with the help of synthetic fiber brush. The material shall meet the requirements as specified in ACI-212-3R-2010 i.e by reducing permeability of concrete by more than 90% compared with control concrete as per DIN 1048 and resistant to 16 bar hydrostatic pressure on negative side. The crystalline slurry shall be capable of self-healing of cracks up to a width of 0.50mm. The work shall be carried out all complete as per specification and the direction of the engineerin- charge. The product performance shall carry guarantee for 10 years against any leakage.For vertical surface two coats @0.70 kg per sqm						
	Providing and applying integral crystalline slurry of hydrophilic in nature for waterproofing treatment to the						
	inside of walls	2	16.000		4.100		131.200
	Total						**131.200**
						Total Quantity in sqm	**131.200**
9.009	22.23.2						

Sl No	Specification	No	Length	Width	Depth	Cf	Quantity
	Providing and applying integral crystalline slurry of hydrophilic in nature for waterproofing treatment to the RCC structures like retaining walls of the basement, water tanks, roof slabs, podiums, reservior, sewage & water treatment plant, tunnels / subway and bridge deck etc., prepared by mixing in the ratio of 5 : 2 (5 parts integral crystalline slurry : 2 parts water) for vertical surfaces and 3 : 1 (3 parts integral crystalline slurry : 1 part water) for horizontal surfaces and applying the same from negative (internal) side with the help of synthetic fiber brush. The material shall meet the requirements as specified in ACI-212-3R-2010 i.e by reducing permeability of concrete by more than 90% compared with control concrete as per DIN 1048 and resistant to 16 bar hydrostatic pressure on negative side. The crystalline slurry shall be capable of self-healing of cracks up to a width of 0.50mm. The work shall be carried out all complete as per specification and the direction of the engineerin- charge. The product performance shall carry guarantee for 10 years against any leakage.For horizontal surface one coat @1.10 kg per sqm.						
	Providing and applying integral crystalline slurry of hydrophilic in nature for waterproofing treatment to the						
	bottom slab inside	1	8.000	8.000			64.000
	Total						**64.000**
						Total Quantity in sqm	**64.000**
9.010	13.7.1						
	12 mm cement plaster finished with a floating coat of neat cement of mix:1:3 (1 cement : 3 fine sand)						
	12 mm cement plaster finished with a floating coat of neat cement of mix:						
	inside of walls	2	16.000		4.100		131.200
	base slab inside	1	8.000	8.000			64.000
	Total						**195.200**
						Total Quantity in sqm	**195.200**
10	CIVIL COMPONENTS - SECONDARY CLARIFIER WITH PLATE SETTLER						
10.001	2.6.1						
	Earth work in excavation by mechanical means (Hydraulic excavator)/manual means over areas (exceeding 30 cm in depth, 1.5 m in width as well as 10 sqm on plan) including disposal of excavated earth, lead up to 50 m and lift up to 1.5 m, disposed earth to be levelled and neatly dressed.All kinds of soil						
	Earth work in excavation by mechanical means (Hydraulic excavator)/manual means over areas						
	for clarifier	1	10.800	10.800	3.000		349.920
	Total						**349.920**
						Total Quantity in cum	**349.920**
10.00	OD21914/2022-2023						

Sl No	Specification	No	Length	Width	Depth	Cf	Quantity
	(Item 5.37.1+5.34.1) Providing and laying in position ready mixed M-25 grade concrete for reinforced cement concrete work, using cement content as per approved design mix, manufactured in fully automatic batching plant and transported to site of work in transit mixer for all leads, having continuous agitated mixer, manufactured as per mix design of specified grade for reinforced cement concrete work including pumping of R.M.C. from transit mixer to site of laying, excluding the cost of centering, shuttering finishing and reinforcement including cost of admixtures in recommended proportions as per IS: 9103 to accelerate/ retard setting of concrete, improve workability without impairing strength and durability as per direction of the Engineer - in -charge. Note:- Cement content considered in this item is @330 kg/cum. Excess /less cement used as per design mix is payable/recoverable separately. All wiork upto plinth level Extra for providing richer mixes at all floor levels. Note:- Excess/less cement over the specified cement content used is payable/ recoverable separately. Providing M-30 grade concrete instead of M-25 grade BMC/RMC. (Note:- Cement content considered in M-30 is @ 340 kg/cum). 						
	Providing and laying in position ready mixed M-25 grade concrete for reinforced cement						
	Base slab	1	8.000	4.800	0.300	0.750000	8.640
	Base slab-inverted beams	1	4.000	5.400	0.300	0.850000	5.508
	Total						**14.148**
						Total Quantity in cum	**14.148**
10.003	OD21915/2022-2023						
	od20804/2022_2023 :(5.37.2+5.34.1) Providing and laying in position ready mixed M-25 grade concrete for reinforced cement concrete work, using cement content as per approved design mix, manufactured in fully automatic batching plant and transported to site of work in transit mixer for all leads, having continuous agitated mixer, manufactured as per mix design of specified grade for reinforced cement concrete work including pumping of R.M.C. from transit mixer to site of laying, excluding the cost of centering, shuttering finishing and reinforcement including cost of admixtures in recommended proportions as per IS: 9103 to accelerate/ retard setting of concrete, improve workability without impairing strength and durability as per direction of the Engineer - in -charge. Note:- Cement content considered in this item is @330 kg/cum. Excess /less cement used as per design mix is payable/recoverable separately. All work above plinth level upto floor V level Extra for providing richer mixes at all floor levels. Note:- Excess/less cement over the specified cement content used is payable/ recoverable separately. Providing M-30 grade concrete instead of M-25 grade BMC/RMC. (Note:- Cement content considered in M-30 is @ 340 kg/cum). 						
	Providing and laying in position ready mixed M-25 grade concrete						
	Clarified-square container	4	9.950	0.350	3.500		48.755
	Clarified-hopper container	4	7.850	0.350	3.660		40.223
	top channels	4	10.050	0.200	1.050		8.442
	Total						**97.420**

Sl No	Specification	No	Length	Width	Depth	Cf	Quantity
	Deduction						
	inlet pipe	-1	0.049	0.350			-0.017
	Total						**-0.017**
						Total Quantity in cum	**97.403**
10.004	5.22.6						
	Steel reinforcement for R.C.C work including straightening, cutting, bending, placing in position and binding all complete upto plinth levelThermo - Mechanically Treated bars of grade Fe-500D or more						
	Steel reinforcement for R.C.C work including straightening, cutting, bending, placing in position and binding all						
	quantity as per item number. 3	1		14.148	120.000		1697.760
	quantity as per item number.4	1		97.420	120.000		11690.400
	Total						**13388.160**
						Total Quantity in kilogram	**13388.160**
10.005	4.12						
	Extra for providing and mixing water proofing material in cement concrete work in doses by weight of cement as per manufacturer's specification .						
	Extra for providing and mixing water proofing material in cement concrete work in doses by weight of cement as per						
	quantity as per item No.3	1		14.148	340.000		4810.320
	quantity as per item No.4	1		97.420	340.000		33122.800
	Total						**37933.120**
						Total Quantity in kg	**37933.120**
10.006	5.9.1						
	Centering and shuttering including strutting, etc. and removal of form for:Foundations, footings, bases of columns, etc for mass concrete						
	Centering and shuttering including strutting, etc. and removal of form for:						
	bottom slab -raft beam slab type	4	10.800		0.350		15.120
	bottom slab - inverted beams	4	10.300		0.750		30.900
	bottom slab - inverted beams	4	9.450		0.600		22.680
	top chanels	4	10.750		1.200		51.600

Sl No	Specification	No	Length	Width	Depth	Cf	Quantity
	Total						**120.300**
						Total Quantity in sqm	**120.300**
10.007	22.23.1						
	Providing and applying integral crystalline slurry of hydrophilic in nature for waterproofing treatment to the RCC structures like retaining walls of the basement, water tanks, roof slabs, podiums, reservior, sewage & water treatment plant, tunnels / subway and bridge deck etc., prepared by mixing in the ratio of 5 : 2 (5 parts integral crystalline slurry : 2 parts water) for vertical surfaces and 3 : 1 (3 parts integral crystalline slurry : 1 part water) for horizontal surfaces and applying the same from negative (internal) side with the help of synthetic fiber brush. The material shall meet the requirements as specified in ACI-212-3R-2010 i.e by reducing permeability of concrete by more than 90% compared with control concrete as per DIN 1048 and resistant to 16 bar hydrostatic pressure on negative side. The crystalline slurry shall be capable of self-healing of cracks up to a width of 0.50mm. The work shall be carried out all complete as per specification and the direction of the engineerin- charge. The product performance shall carry guarantee for 10 years against any leakage.For vertical surface two coats @0.70 kg per sqm						
	Providing and applying integral crystalline slurry of hydrophilic in nature for waterproofing treatment to the						
	inside of walls-upper	4	9.600		3.500		134.400
	inside of walls-iower	4	7.500		3.660		109.800
	top chanels	4	10.750	1.050			45.150
	Total						**289.350**
						Total Quantity in sqm	**289.350**
10.008	22.23.2						
	Providing and applying integral crystalline slurry of hydrophilic in nature for waterproofing treatment to the RCC structures like retaining walls of the basement, water tanks, roof slabs, podiums, reservior, sewage & water treatment plant, tunnels / subway and bridge deck etc., prepared by mixing in the ratio of 5 : 2 (5 parts integral crystalline slurry : 2 parts water) for vertical surfaces and 3 : 1 (3 parts integral crystalline slurry : 1 part water) for horizontal surfaces and applying the same from negative (internal) side with the help of synthetic fiber brush. The material shall meet the requirements as specified in ACI-212-3R-2010 i.e by reducing permeability of concrete by more than 90% compared with control concrete as per DIN 1048 and resistant to 16 bar hydrostatic pressure on negative side. The crystalline slurry shall be capable of self-healing of cracks up to a width of 0.50mm. The work shall be carried out all complete as per specification and the direction of the engineerin- charge. The product performance shall carry guarantee for 10 years against any leakage.For horizontal surface one coat @1.10 kg per sqm.						
	Providing and applying integral crystalline slurry of hydrophilic in nature for waterproofing treatment to the						
	bottom slab inside	1	5.400	5.400			29.160

Sl No	Specification	No	Length	Width	Depth	Cf	Quantity
	Total						**29.160**
						Total Quantity in sqm	**29.160**
10.009	13.7.1						
	12 mm cement plaster finished with a floating coat of neat cement of mix:1:3 (1 cement : 3 fine sand)						
	12 mm cement plaster finished with a floating coat of neat cement of mix:						
	inside of walls upper	4	9.600		3.500		134.400
	inside of wall lower	4	7.500		3.660		109.800
	top chanels	4	10.750		1.050		45.150
	base slab inside	4	5.400	5.400			116.640
	Total						**405.990**
						Total Quantity in sqm	**405.990**
11	CIVIL COMPONENTS - SLUDGE SUMP - CIRCULAR						
11.001	2.6.1						
	Earth work in excavation by mechanical means (Hydraulic excavator)/manual means over areas (exceeding 30 cm in depth, 1.5 m in width as well as 10 sqm on plan) including disposal of excavated earth, lead up to 50 m and lift up to 1.5 m, disposed earth to be levelled and neatly dressed.All kinds of soil						
	Earth work in excavation by mechanical means (Hydraulic excavator)/manual means over areas						
	For sludge sump	1	5.600	5.600	2.150	0.790000	53.265
	Total						**53.265**
						Total Quantity in cum	**53.265**
11.002	4.1.6						
	Providing and laying in position cement concrete of specified grade excluding the cost of centering and shuttering - All work up to plinth level:1:3:6 (1 cement : 3 coarse sand : 6 graded stone aggregate 40 mm nominal size)						
	Providing and laying in position cement concrete of specified grade excluding the cost of centering						
	For sludge sump	1	5.600	5.600	0.150	0.790000	3.716
	Total						**3.716**
						Total Quantity in cum	**3.716**
11.00	OD21965/2022-2023						

Sl No	Specification	No	Length	Width	Depth	Cf	Quantity
	(Item 5.37.1+5.34.1) Providing and laying in position ready mixed M-25 grade concrete for reinforced cement concrete work, using cement content as per approved design mix, manufactured in fully automatic batching plant and transported to site of work in transit mixer for all leads, having continuous agitated mixer, manufactured as per mix design of specified grade for reinforced cement concrete work including pumping of R.M.C. from transit mixer to site of laying, excluding the cost of centering, shuttering finishing and reinforcement including cost of admixtures in recommended proportions as per IS: 9103 to accelerate/ retard setting of concrete, improve workability without impairing strength and durability as per direction of the Engineer - in -charge. Note:- Cement content considered in this item is @330 kg/cum. Excess /less cement used as per design mix is payable/recoverable separately. All wiork upto plinth level Extra for providing richer mixes at all floor levels. Note:- Excess/less cement over the specified cement content used is payable/ recoverable separately. Providing M-30 grade concrete instead of M-25 grade BMC/RMC. (Note:- Cement content considered in M-30 is @ 340 kg/cum). 						
	Providing and laying in position ready mixed M-25 grade concrete for reinforced cement						
	Base slab	1	5.600	5.600	0.300	0.790000	7.432
	Tank walls	1	11.930	0.300	3.100		11.095
	Total						**18.527**
						Total Quantity in cum	**18.527**
11.004	5.22.6						
	Steel reinforcement for R.C.C work including straightening, cutting, bending, placing in position and binding all complete upto plinth levelThermo - Mechanically Treated bars of grade Fe-500D or more						
	Steel reinforcement for R.C.C work including straightening, cutting, bending, placing in position a						
	Quantity as per item No:3	1		18.490	120.000		2218.800
	Total						**2218.800**
						Total Quantity in kilogram	**2218.800**
11.005	4.12						
	Extra for providing and mixing water proofing material in cement concrete work in doses by weight of cement as per manufacturer's specification .						
	Extra for providing and mixing water proofing material in cement concrete work in doses by weight of cement						
	Quantity as per item No:3	1		18.490		340.000000	6286.600
	Total						**6286.600**
						Total Quantity in kg	**6286.600**
11.00	5.9.1						

Sl No	Specification	No	Length	Width	Depth	Cf	Quantity
	Centering and shuttering including strutting, etc. and removal of form for:Foundations, footings, bases of columns, etc for mass concrete						
	Centering and shuttering including strutting, etc. and removal of form for:						
	Bottom slab	1	12.870		0.300		3.861
	Total						**3.861**
						Total Quantity in sqm	**3.861**
11.007	5.9.2						
	Centering and shuttering including strutting, etc. and removal of form for:Walls (any thickness) including attached pilasters, butteresses, plinth and string courses etc.						
	Centering and shuttering including strutting, etc. and removal of form for:						
	For walls outside	1	12.870		3.100		39.897
	For walls inside	1	10.990		3.100		34.069
	Total						**73.966**
						Total Quantity in sqm	**73.966**
11.008	22.23.1						
	Providing and applying integral crystalline slurry of hydrophilic in nature for waterproofing treatment to the RCC structures like retaining walls of the basement, water tanks, roof slabs, podiums, reservior, sewage & water treatment plant, tunnels / subway and bridge deck etc., prepared by mixing in the ratio of 5 : 2 (5 parts integral crystalline slurry : 2 parts water) for vertical surfaces and 3 : 1 (3 parts integral crystalline slurry : 1 part water) for horizontal surfaces and applying the same from negative (internal) side with the help of synthetic fiber brush. The material shall meet the requirements as specified in ACI-212-3R-2010 i.e by reducing permeability of concrete by more than 90% compared with control concrete as per DIN 1048 and resistant to 16 bar hydrostatic pressure on negative side. The crystalline slurry shall be capable of self-healing of cracks up to a width of 0.50mm. The work shall be carried out all complete as per specification and the direction of the engineerin- charge. The product performance shall carry guarantee for 10 years against any leakage.For vertical surface two coats @0.70 kg per sqm						
	Providing and applying integral crystalline slurry of hydrophilic in nature for waterproofing treatment t						
	Inside of walls	1	10.990		2.000		21.980
	Total						**21.980**
						Total Quantity in sqm	**21.980**
11.00	22.23.2						

Sl No	Specification	No	Length	Width	Depth	Cf	Quantity
	Providing and applying integral crystalline slurry of hydrophilic in nature for waterproofing treatment to the RCC structures like retaining walls of the basement, water tanks, roof slabs, podiums, reservior, sewage & water treatment plant, tunnels / subway and bridge deck etc., prepared by mixing in the ratio of 5 : 2 (5 parts integral crystalline slurry : 2 parts water) for vertical surfaces and 3 : 1 (3 parts integral crystalline slurry : 1 part water) for horizontal surfaces and applying the same from negative (internal) side with the help of synthetic fiber brush. The material shall meet the requirements as specified in ACI-212-3R-2010 i.e by reducing permeability of concrete by more than 90% compared with control concrete as per DIN 1048 and resistant to 16 bar hydrostatic pressure on negative side. The crystalline slurry shall be capable of self-healing of cracks up to a width of 0.50mm. The work shall be carried out all complete as per specification and the direction of the engineerin- charge. The product performance shall carry guarantee for 10 years against any leakage.For horizontal surface one coat @1.10 kg per sqm.						
	Providing and applying integral crystalline slurry of hydrophilic in nature for waterproofing treatment						
	Bottom slab inside	1	9.620				9.620
	Total						**9.620**
						Total Quantity in sqm	**9.620**
11.010	13.7.1						
	12 mm cement plaster finished with a floating coat of neat cement of mix:1:3 (1 cement : 3 fine sand)						
	12 mm cement plaster finished with a floating coat of neat cement of mix:						
	Inside of walls	1	10.990		2.000		21.980
	Base slab inside	1	9.620				9.620
	Total						**31.600**
						Total Quantity in sqm	**31.600**
12	CIVIL COMPONENTS- SLUDGE THICKENER - CIRCULAR						
12.001	2.6.1						
	Earth work in excavation by mechanical means (Hydraulic excavator)/manual means over areas (exceeding 30 cm in depth, 1.5 m in width as well as 10 sqm on plan) including disposal of excavated earth, lead up to 50 m and lift up to 1.5 m, disposed earth to be levelled and neatly dressed.All kinds of soil						
	Earth work in excavation by mechanical means (Hydraulic excavator)/manual means over areas						
	For Sludge thickner	1	7.800	7.800	3.500	0.790000	168.223
	Total						**168.223**
						Total Quantity in cum	**168.223**
12.00	4.1.6						

Sl No	Specification	No	Length	Width	Depth	Cf	Quantity
	Providing and laying in position cement concrete of specified grade excluding the cost of centering and shuttering - All work up to plinth level:1:3:6 (1 cement : 3 coarse sand : 6 graded stone aggregate 40 mm nominal size)						
	Providing and laying in position cement concrete of specified grade excluding the cost of centering and						
	For sludge thickner	1	7.800	7.800	0.150	0.790000	7.210
	Total						**7.210**
						Total Quantity in cum	**7.210**
12.003	OD21966/2022-2023						
	(Item 5.37.1+5.34.1) Providing and laying in position ready mixed M-25 grade concrete for reinforced cement concrete work, using cement content as per approved design mix, manufactured in fully automatic batching plant and transported to site of work in transit mixer for all leads, having continuous agitated mixer, manufactured as per mix design of specified grade for reinforced cement concrete work including pumping of R.M.C. from transit mixer to site of laying, excluding the cost of centering, shuttering finishing and reinforcement including cost of admixtures in recommended proportions as per IS: 9103 to accelerate/ retard setting of concrete, improve workability without impairing strength and durability as per direction of the Engineer - in -charge. Note:- Cement content considered in this item is @330 kg/cum. Excess /less cement used as per design mix is payable/recoverable separately. All wiork upto plinth level Extra for providing richer mixes at all floor levels. Note:- Excess/less cement over the specified cement content used is payable/ recoverable separately. Providing M-30 grade concrete instead of M-25 grade BMC/RMC. (Note:- Cement content considered in M-30 is @ 340 kg/cum). 						
	Providing and laying in position ready mixed M-25 grade concrete for reinforced cement						
	base slab	1	7.800	7.800	0.350	0.790000	16.822
	Tank walls	1	21.980	0.300	3.000		19.782
	Total						**36.604**
						Total Quantity in cum	**36.604**
12.004	5.22.6						
	Steel reinforcement for R.C.C work including straightening, cutting, bending, placing in position and binding all complete upto plinth levelThermo - Mechanically Treated bars of grade Fe-500D or more						
	Steel reinforcement for R.C.C work including straightening, cutting, bending, placing in position and binding all						
	QUANITY AS PER ITEM No.3	1		36.510		120.000000	4381.200
	Total						**4381.200**
						Total Quantity in kilogram	**4381.200**
12.00	4.12						

Sl No	Specification	No	Length	Width	Depth	Cf	Quantity
	Extra for providing and mixing water proofing material in cement concrete work in doses by weight of cement as per manufacturer's specification .						
	Extra for providing and mixing water proofing material in cement concrete work in doses by weight of cement as						
	Qunatity as per item No.3	1		36.510		340.000000	12413.400
	Total						**12413.400**
						Total Quantity in kg	**12413.400**
12.006	5.9.1						
	Centering and shuttering including strutting, etc. and removal of form for:Foundations, footings, bases of columns, etc for mass concrete						
	Centering and shuttering including strutting, etc. and removal of form for:						
	bottom slab	1	24.490		0.350		8.572
	Total						**8.572**
						Total Quantity in sqm	**8.572**
12.007	5.9.2						
	Centering and shuttering including strutting, etc. and removal of form for:Walls (any thickness) including attached pilasters, butteresses, plinth and string courses etc.						
	Centering and shuttering including strutting, etc. and removal of form for:						
	for wall outside	1	22.920		2.500		57.300
	for wall inside	1	21.040		2.500		52.600
	Total						**109.900**
						Total Quantity in sqm	**109.900**
12.008	22.23.1						
	Providing and applying integral crystalline slurry of hydrophilic in nature for waterproofing treatment to the RCC structures like retaining walls of the basement, water tanks, roof slabs, podiums, reservior, sewage & water treatment plant, tunnels / subway and bridge deck etc., prepared by mixing in the ratio of 5 : 2 (5 parts integral crystalline slurry : 2 parts water) for vertical surfaces and 3 : 1 (3 parts integral crystalline slurry : 1 part water) for horizontal surfaces and applying the same from negative (internal) side with the help of synthetic fiber brush. The material shall meet the requirements as specified in ACI-212-3R-2010 i.e by reducing permeability of concrete by more than 90% compared with control concrete as per DIN 1048 and resistant to 16 bar hydrostatic pressure on negative side. The crystalline slurry shall be capable of self-healing of cracks up to a width of 0.50mm. The work shall be carried out all complete as per specification and the direction of the engineerin- charge. The product performance shall carry guarantee for 10 years against any leakage.For vertical surface two coats @0.70 kg per sqm						
	Providing and applying integral crystalline slurry of hydrophilic in nature for waterproofing treatment						

Sl No	Specification	No	Length	Width	Depth	Cf	Quantity
	inside of walls	1	21.040		2.500		52.600
	Total						**52.600**
						Total Quantity in sqm	**52.600**
12.009	22.23.2						
	Providing and applying integral crystalline slurry of hydrophilic in nature for waterproofing treatment to the RCC structures like retaining walls of the basement, water tanks, roof slabs, podiums, reservior, sewage & water treatment plant, tunnels / subway and bridge deck etc., prepared by mixing in the ratio of 5 : 2 (5 parts integral crystalline slurry : 2 parts water) for vertical surfaces and 3 : 1 (3 parts integral crystalline slurry : 1 part water) for horizontal surfaces and applying the same from negative (internal) side with the help of synthetic fiber brush. The material shall meet the requirements as specified in ACI-212-3R-2010 i.e by reducing permeability of concrete by more than 90% compared with control concrete as per DIN 1048 and resistant to 16 bar hydrostatic pressure on negative side. The crystalline slurry shall be capable of self-healing of cracks up to a width of 0.50mm. The work shall be carried out all complete as per specification and the direction of the engineerin- charge. The product performance shall carry guarantee for 10 years against any leakage.For horizontal surface one coat @1.10 kg per sqm.						
	Providing and applying integral crystalline slurry of hydrophilic in nature for waterproofing treatment to the						
	bottom slab inside	1	35.260				35.260
	Total						**35.260**
						Total Quantity in sqm	**35.260**
12.010	13.7.1						
	12 mm cement plaster finished with a floating coat of neat cement of mix:1:3 (1 cement : 3 fine sand)						
	12 mm cement plaster finished with a floating coat of neat cement of mix:						
	inside of walls	1	21.040		2.500		52.600
	base slab inside	1	35.260				35.260
	Total						**87.860**
						Total Quantity in sqm	**87.860**
13	CIVIL COMPONENTS - CHLORINE CONTACT TANK - RECTANGULAR						
13.001	2.6.1						
	Earth work in excavation by mechanical means (Hydraulic excavator)/manual means over areas (exceeding 30 cm in depth, 1.5 m in width as well as 10 sqm on plan) including disposal of excavated earth, lead up to 50 m and lift up to 1.5 m, disposed earth to be levelled and neatly dressed.All kinds of soil						
	Earth work in excavation by mechanical means (Hydraulic excavator)/manual means over areas (exceeding 30 cm in						
	for chlorine contact tank	1	8.600	8.600	2.000		147.920

Sl No	Specification	No	Length	Width	Depth	Cf	Quantity
	Total						**147.920**
						Total Quantity in cum	**147.920**
13.002	4.1.6						
	Providing and laying in position cement concrete of specified grade excluding the cost of centering and shuttering - All work up to plinth level:1:3:6 (1 cement : 3 coarse sand : 6 graded stone aggregate 40 mm nominal size)						
	Providing and laying in position cement concrete of specified grade excluding the cost of centering and						
	for chlorine contact tank	1	8.600	8.600	0.150		11.094
	Total						**11.094**
						Total Quantity in cum	**11.094**
13.003	OD21913/2022-2023						
	(Item 5.37.1+5.34.1) Providing and laying in position ready mixed M-25 grade concrete for reinforced cement concrete work, using cement content as per approved design mix, manufactured in fully automatic batching plant and transported to site of work in transit mixer for all leads, having continuous agitated mixer, manufactured as per mix design of specified grade for reinforced cement concrete work including pumping of R.M.C. from transit mixer to site of laying, excluding the cost of centering, shuttering finishing and reinforcement including cost of admixtures in recommended proportions as per IS: 9103 to accelerate/ retard setting of concrete, improve workability without impairing strength and durability as per direction of the Engineer - in -charge. Note:- Cement content considered in this item is @330 kg/cum. Excess /less cement used as per design mix is payable/recoverable separately. All wiork upto plinth level Extra for providing richer mixes at all floor levels. Note:- Excess/less cement over the specified cement content used is payable/ recoverable separately. Providing M-30 grade concrete instead of M-25 grade BMC/RMC. (Note:- Cement content considered in M-30 is @ 340 kg/cum). 						
	Providing and laying in position ready mixed M-25 grade concrete for reinforced cement						
	base slab	1	8.600	8.600	0.350		25.886
	Tank walls	4	7.900	0.300	2.500		23.700
	Total						**49.586**
						Total Quantity in cum	**49.586**
13.004	5.22.6						
	Steel reinforcement for R.C.C work including straightening, cutting, bending, placing in position and binding all complete upto plinth levelThermo - Mechanically Treated bars of grade Fe-500D or more						
	Steel reinforcement for R.C.C work including straightening, cutting, bending, placing in position and binding all						
	Quantity as per item no. 3	1	49.590		120.000		5950.800
	Total						**5950.800**

Sl No	Specification	No	Length	Width	Depth	Cf	Quantity
						Total Quantity in kilogram	**5950.800**
13.005	4.12						
	Extra for providing and mixing water proofing material in cement concrete work in doses by weight of cement as per manufacturer's specification .						
	Extra for providing and mixing water proofing material in cement concrete work in doses by weight of cement as						
	Qunatity as per item No.3	1	49.590		340.000		16860.600
	Total						**16860.600**
						Total Quantity in kg	**16860.600**
13.006	5.9.1						
	Centering and shuttering including strutting, etc. and removal of form for:Foundations, footings, bases of columns, etc for mass concrete						
	Centering and shuttering including strutting, etc. and removal of form for:						
	bottom slab	4	8.600		0.350		12.040
	Total						**12.040**
						Total Quantity in sqm	**12.040**
13.007	5.9.2						
	Centering and shuttering including strutting, etc. and removal of form for:Walls (any thickness) including attached pilasters, butteresses, plinth and string courses etc.						
	Centering and shuttering including strutting, etc. and removal of form for:						
	For wall outside	4	8.200	2.500			82.000
	For wall inside	4	7.600	2.500			76.000
	Total						**158.000**
						Total Quantity in sqm	**158.000**
13.008	22.23.1						
	Providing and applying integral crystalline slurry of hydrophilic in nature for waterproofing treatment to the RCC structures like retaining walls of the basement, water tanks, roof slabs, podiums, reservior, sewage & water treatment plant, tunnels / subway and bridge deck etc., prepared by mixing in the ratio of 5 : 2 (5 parts integral crystalline slurry : 2 parts water) for vertical surfaces and 3 : 1 (3 parts integral crystalline slurry : 1 part water) for horizontal surfaces and applying the same from negative (internal) side with the help of synthetic fiber brush. The material shall meet the requirements as specified in ACI-212-3R-2010 i.e by reducing permeability of concrete by more than 90% compared with control concrete as per DIN 1048 and resistant to 16 bar hydrostatic pressure on negative side. The crystalline slurry shall be capable of self-healing of cracks up to a width of 0.50mm. The work shall be carried out all complete as per specification and the direction of the engineerin- charge. The product performance shall carry guarantee for 10 years against any leakage.For vertical surface two coats @0.70 kg per sqm						

Sl No	Specification	No	Length	Width	Depth	Cf	Quantity
	Providing and applying integral crystalline slurry of hydrophilic in nature for waterproofing treatment to the						
	inside of walls	4	7.600	2.500			76.000
	Total						**76.000**
						Total Quantity in sqm	**76.000**
13.009	22.23.2						
	Providing and applying integral crystalline slurry of hydrophilic in nature for waterproofing treatment to the RCC structures like retaining walls of the basement, water tanks, roof slabs, podiums, reservior, sewage & water treatment plant, tunnels / subway and bridge deck etc., prepared by mixing in the ratio of 5 : 2 (5 parts integral crystalline slurry : 2 parts water) for vertical surfaces and 3 : 1 (3 parts integral crystalline slurry : 1 part water) for horizontal surfaces and applying the same from negative (internal) side with the help of synthetic fiber brush. The material shall meet the requirements as specified in ACI-212-3R-2010 i.e by reducing permeability of concrete by more than 90% compared with control concrete as per DIN 1048 and resistant to 16 bar hydrostatic pressure on negative side. The crystalline slurry shall be capable of self-healing of cracks up to a width of 0.50mm. The work shall be carried out all complete as per specification and the direction of the engineerin- charge. The product performance shall carry guarantee for 10 years against any leakage.For horizontal surface one coat @1.10 kg per sqm.						
	Providing and applying integral crystalline slurry of hydrophilic in nature for waterproofing treatment to the						
	bottom slab inside	1	7.600	7.600			57.760
	Total						**57.760**
						Total Quantity in sqm	**57.760**
13.010	13.7.1						
	12 mm cement plaster finished with a floating coat of neat cement of mix:1:3 (1 cement : 3 fine sand)						
	12 mm cement plaster finished with a floating coat of neat cement of mix:						
	inside of walls	4	7.600	2.500			76.000
	base slab inside	1	7.600	7.600			57.760
	Total						**133.760**
						Total Quantity in sqm	**133.760**
14	CIVIL COMPONENTS - FILTER FEED TANK - RECTANGULAR						
14.001	2.6.1						
	Earth work in excavation by mechanical means (Hydraulic excavator)/manual means over areas (exceeding 30 cm in depth, 1.5 m in width as well as 10 sqm on plan) including disposal of excavated earth, lead up to 50 m and lift up to 1.5 m, disposed earth to be levelled and neatly dressed.All kinds of soil						
	Earth work in excavation by mechanical means (Hydraulic excavator)/manual means over areas (exceeding 30 cm in						

Sl No	Specification	No	Length	Width	Depth	Cf	Quantity
	For filter feild tank	1	7.300	7.300	1.000		53.290
	Total						**53.290**
						Total Quantity in cum	**53.290**
14.002	4.1.6						
	Providing and laying in position cement concrete of specified grade excluding the cost of centering and shuttering - All work up to plinth level:1:3:6 (1 cement : 3 coarse sand : 6 graded stone aggregate 40 mm nominal size)						
	Providing and laying in position cement concrete of specified grade excluding the cost of centering and						
	For filter feild tank	1	7.300	7.300	0.150		7.994
	Total						**7.994**
						Total Quantity in cum	**7.994**
14.003	OD21910/2022-2023						
	(Item 5.37.1+5.34.1) Providing and laying in position ready mixed M-25 grade concrete for reinforced cement concrete work, using cement content as per approved design mix, manufactured in fully automatic batching plant and transported to site of work in transit mixer for all leads, having continuous agitated mixer, manufactured as per mix design of specified grade for reinforced cement concrete work including pumping of R.M.C. from transit mixer to site of laying, excluding the cost of centering, shuttering finishing and reinforcement including cost of admixtures in recommended proportions as per IS: 9103 to accelerate/ retard setting of concrete, improve workability without impairing strength and durability as per direction of the Engineer - in -charge. Note:- Cement content considered in this item is @330 kg/cum. Excess /less cement used as per design mix is payable/recoverable separately. All wiork upto plinth level Extra for providing richer mixes at all floor levels. Note:- Excess/less cement over the specified cement content used is payable/ recoverable separately. Providing M-30 grade concrete instead of M-25 grade BMC/RMC. (Note:- Cement content considered in M-30 is @ 340 kg/cum). 						
	Providing and laying in position ready mixed M-25 grade concrete for reinforced cement concrete work, using cement content as per approve						
	Base slab	1	7.300	7.300	0.300		15.987
	Tank walls	2	12.900	0.250	2.350		15.158
	Total						**31.145**
						Total Quantity in cum	**31.145**
14.004	5.22.6						
	Steel reinforcement for R.C.C work including straightening, cutting, bending, placing in position and binding all complete upto plinth levelThermo - Mechanically Treated bars of grade Fe-500D or more						
	Providing and laying in position cement concrete of specified grade excluding the cost of centering and						

Sl No	Specification	No	Length	Width	Depth	Cf	Quantity
	Qunatity as per item No.3	1	31.140	120.000			3736.800
	Total						**3736.800**
						Total Quantity in kilogram	**3736.800**
14.005	4.12						
	Extra for providing and mixing water proofing material in cement concrete work in doses by weight of cement as per manufacturer's specification .						
	Extra for providing and mixing water proofing material in cement concrete work in doses by weight of cement as per						
	Qunatity as per item No.3	1		31.140	340.000		10587.600
	Total						**10587.600**
						Total Quantity in kg	**10587.600**
14.006	5.9.1						
	Centering and shuttering including strutting, etc. and removal of form for:Foundations, footings, bases of columns, etc for mass concrete						
	Centering and shuttering including strutting, etc. and removal of form for:						
	bottom slab	2	14.600	0.300			8.760
	Total						**8.760**
						Total Quantity in sqm	**8.760**
14.007	5.9.2						
	Centering and shuttering including strutting, etc. and removal of form for:Walls (any thickness) including attached pilasters, butteresses, plinth and string courses etc.						
	Centering and shuttering including strutting, etc. and removal of form for:						
	for wall outside	2	13.400		2.350		62.980
	for wall inside	2	12.400		2.350		58.280
	Total						**121.260**
						Total Quantity in sqm	**121.260**
14.00	22.23.1						

Sl No	Specification	No	Length	Width	Depth	Cf	Quantity
	Providing and applying integral crystalline slurry of hydrophilic in nature for waterproofing treatment to the RCC structures like retaining walls of the basement, water tanks, roof slabs, podiums, reservior, sewage & water treatment plant, tunnels / subway and bridge deck etc., prepared by mixing in the ratio of 5 : 2 (5 parts integral crystalline slurry : 2 parts water) for vertical surfaces and 3 : 1 (3 parts integral crystalline slurry : 1 part water) for horizontal surfaces and applying the same from negative (internal) side with the help of synthetic fiber brush. The material shall meet the requirements as specified in ACI-212-3R-2010 i.e by reducing permeability of concrete by more than 90% compared with control concrete as per DIN 1048 and resistant to 16 bar hydrostatic pressure on negative side. The crystalline slurry shall be capable of self-healing of cracks up to a width of 0.50mm. The work shall be carried out all complete as per specification and the direction of the engineerin- charge. The product performance shall carry guarantee for 10 years against any leakage.For vertical surface two coats @0.70 kg per sqm						
	Providing and applying integral crystalline slurry of hydrophilic in nature for waterproofing treatment to the						
	inside of walls	2	12.400		2.350		58.280
	Total						**58.280**
						Total Quantity in sqm	**58.280**
14.009	22.23.2						
	Providing and applying integral crystalline slurry of hydrophilic in nature for waterproofing treatment to the RCC structures like retaining walls of the basement, water tanks, roof slabs, podiums, reservior, sewage & water treatment plant, tunnels / subway and bridge deck etc., prepared by mixing in the ratio of 5 : 2 (5 parts integral crystalline slurry : 2 parts water) for vertical surfaces and 3 : 1 (3 parts integral crystalline slurry : 1 part water) for horizontal surfaces and applying the same from negative (internal) side with the help of synthetic fiber brush. The material shall meet the requirements as specified in ACI-212-3R-2010 i.e by reducing permeability of concrete by more than 90% compared with control concrete as per DIN 1048 and resistant to 16 bar hydrostatic pressure on negative side. The crystalline slurry shall be capable of self-healing of cracks up to a width of 0.50mm. The work shall be carried out all complete as per specification and the direction of the engineerin- charge. The product performance shall carry guarantee for 10 years against any leakage.For horizontal surface one coat @1.10 kg per sqm.						
	Providing and applying integral crystalline slurry of hydrophilic in nature for waterproofing treatment to the						
	bottom slab inside	1	6.200	6.200			38.440
	Total						**38.440**
						Total Quantity in sqm	**38.440**
14.010	13.7.1						
	12 mm cement plaster finished with a floating coat of neat cement of mix:1:3 (1 cement : 3 fine sand)						
	12 mm cement plaster finished with a floating coat of neat cement of mix:						

Sl No	Specification	No	Length	Width	Depth	Cf	Quantity
	inside of walls	2	12.400	2.350			58.280
	base slab inside	1	6.200	6.200			38.440
	Total						**96.720**
						Total Quantity in sqm	**96.720**
15	CIVIL COMPONENTS - TREATED WATER TANK - RECTANGULAR						
15.001	2.6.1						
	Earth work in excavation by mechanical means (Hydraulic excavator)/manual means over areas (exceeding 30 cm in depth, 1.5 m in width as well as 10 sqm on plan) including disposal of excavated earth, lead up to 50 m and lift up to 1.5 m, disposed earth to be levelled and neatly dressed.All kinds of soil						
	Earth work in excavation by mechanical means (Hydraulic excavator)/manual means over areas						
	For treated water tank	1	10.400	10.400	3.150		340.704
	Total						**340.704**
						Total Quantity in cum	**340.704**
15.002	4.1.6						
	Providing and laying in position cement concrete of specified grade excluding the cost of centering and shuttering - All work up to plinth level:1:3:6 (1 cement : 3 coarse sand : 6 graded stone aggregate 40 mm nominal size)						
	Providing and laying in position cement concrete of specified grade excluding the cost of centering						
	For treated water tank	1	10.400	10.400	0.150		16.224
	Total						**16.224**
						Total Quantity in cum	**16.224**
15.003	OD21912/2022-2023						
	(Item 5.37.1+5.34.1) Providing and laying in position ready mixed M-25 grade concrete for reinforced cement concrete work, using cement content as per approved design mix, manufactured in fully automatic batching plant and transported to site of work in transit mixer for all leads, having continuous agitated mixer, manufactured as per mix design of specified grade for reinforced cement concrete work including pumping of R.M.C. from transit mixer to site of laying, excluding the cost of centering, shuttering finishing and reinforcement including cost of admixtures in recommended proportions as per IS: 9103 to accelerate/ retard setting of concrete, improve workability without impairing strength and durability as per direction of the Engineer - in -charge. Note:- Cement content considered in this item is @330 kg/cum. Excess /less cement used as per design mix is payable/recoverable separately. All wiork upto plinth level Extra for providing richer mixes at all floor levels. Note:- Excess/less cement over the specified cement content used is payable/ recoverable separately. Providing M-30 grade concrete instead of M-25 grade BMC/RMC. (Note:- Cement content considered in M-30 is @ 340 kg/cum). 						
	Providing and laying in position ready mixed M-25 grade concrete for reinforced						

Sl No	Specification	No	Length	Width	Depth	Cf	Quantity
	cement						
	Base slab	1	10.400	10.400	0.300		32.448
	tank walls	2	19.500	0.250	3.000		29.250
	Total						**61.698**
						Total Quantity in cum	**61.698**
15.004	5.22.6						
	Steel reinforcement for R.C.C work including straightening, cutting, bending, placing in position and binding all complete upto plinth levelThermo - Mechanically Treated bars of grade Fe-500D or more						
	Steel reinforcement for R.C.C work including straightening, cutting, bending, placing in position						
	Quantity as per item No;3	1	61.700		120.000		7404.000
	Total						**7404.000**
						Total Quantity in kilogram	**7404.000**
15.005	4.12						
	Extra for providing and mixing water proofing material in cement concrete work in doses by weight of cement as per manufacturer's specification .						
	Extra for providing and mixing water proofing material in cement concrete work in doses by weight of cement						
	Quantity as per item No:3	1	61.700		340.000		20978.000
	Total						**20978.000**
						Total Quantity in kg	**20978.000**
15.006	5.9.1						
	Centering and shuttering including strutting, etc. and removal of form for:Foundations, footings, bases of columns, etc for mass concrete						
	Centering and shuttering including strutting, etc. and removal of form for:						
	Bottom slab	2	20.800	0.300			12.480
	Total						**12.480**
						Total Quantity in sqm	**12.480**
15.007	5.9.2						
	Centering and shuttering including strutting, etc. and removal of form for:Walls (any thickness) including attached pilasters, butteresses, plinth and string courses etc.						
	Centering and shuttering including strutting, etc. and removal of form for: Walls (any thicknes						
	For walls outside	2	20.000	3.000			120.000
	For walls inside	2	19.000	3.000			114.000

Sl No	Specification	No	Length	Width	Depth	Cf	Quantity
	Total						**234.000**
						Total Quantity in sqm	**234.000**
15.008	22.23.1						
	Providing and applying integral crystalline slurry of hydrophilic in nature for waterproofing treatment to the RCC structures like retaining walls of the basement, water tanks, roof slabs, podiums, reservior, sewage & water treatment plant, tunnels / subway and bridge deck etc., prepared by mixing in the ratio of 5 : 2 (5 parts integral crystalline slurry : 2 parts water) for vertical surfaces and 3 : 1 (3 parts integral crystalline slurry : 1 part water) for horizontal surfaces and applying the same from negative (internal) side with the help of synthetic fiber brush. The material shall meet the requirements as specified in ACI-212-3R-2010 i.e by reducing permeability of concrete by more than 90% compared with control concrete as per DIN 1048 and resistant to 16 bar hydrostatic pressure on negative side. The crystalline slurry shall be capable of self-healing of cracks up to a width of 0.50mm. The work shall be carried out all complete as per specification and the direction of the engineerin- charge. The product performance shall carry guarantee for 10 years against any leakage.For vertical surface two coats @0.70 kg per sqm						
	Providing and applying integral crystalline slurry of hydrophilic in nature for waterproofing treatment						
	Inside of walls	2	19.000	3.000			114.000
	Total						**114.000**
						Total Quantity in sqm	**114.000**
15.009	22.23.2						
	Providing and applying integral crystalline slurry of hydrophilic in nature for waterproofing treatment to the RCC structures like retaining walls of the basement, water tanks, roof slabs, podiums, reservior, sewage & water treatment plant, tunnels / subway and bridge deck etc., prepared by mixing in the ratio of 5 : 2 (5 parts integral crystalline slurry : 2 parts water) for vertical surfaces and 3 : 1 (3 parts integral crystalline slurry : 1 part water) for horizontal surfaces and applying the same from negative (internal) side with the help of synthetic fiber brush. The material shall meet the requirements as specified in ACI-212-3R-2010 i.e by reducing permeability of concrete by more than 90% compared with control concrete as per DIN 1048 and resistant to 16 bar hydrostatic pressure on negative side. The crystalline slurry shall be capable of self-healing of cracks up to a width of 0.50mm. The work shall be carried out all complete as per specification and the direction of the engineerin- charge. The product performance shall carry guarantee for 10 years against any leakage.For horizontal surface one coat @1.10 kg per sqm.						
	Providing and applying integral crystalline slurry of hydrophilic in nature for waterproofing treatment						
	Bottom slab inside	1	9.500	9.500			90.250
	Total						**90.250**
						Total Quantity in sqm	**90.250**
15.01	13.7.1						

Sl No	Specification	No	Length	Width	Depth	Cf	Quantity
	12 mm cement plaster finished with a floating coat of neat cement of mix:1:3 (1 cement : 3 fine sand)						
	12 mm cement plaster finished with a floating coat of neat cement of mix:						
	Inside of walls	2	19.000	3.000			114.000
	Base slab Inside	1	9.500	9.500			90.250
	Total						**204.250**
						Total Quantity in sqm	**204.250**
16	PILE FOUNDATIONS						
16.001	20.2.3						
	Boring, providing and installing bored cast-in-situ reinforced cement concrete piles of grade M-25 of specified diameter and length below the pile cap to carry a safe working load not less than specified, excluding the cost of steel reinforcement but including the cost of boring, with bentonite solution and temporary casing of appropriate length for setting out and removal of same and the length of the pile to be embedded in the pile cap etc. all complete, including removal of excavated earth with all lifts and leads (Length of pile for payment shall be measured upto bottom of pile cap).450 mm dia piles						
	Boring, providing and installing bored cast-in-situ reinforced cement concrete piles of grade M-25 of						
	receiving chamber of STP	4	10.000				40.000
	oil and greece trap	4	10.000				40.000
	Grit seperator	4	10.000				40.000
	MBBR III	16	15.000				240.000
	chlorine contact tank	8	15.000				120.000
	Filter feild tank	8	15.000				120.000
	Total						**600.000**
						Total Quantity in metre	**600.000**
16.002	20.2.4						
	Boring, providing and installing bored cast-in-situ reinforced cement concrete piles of grade M-25 of specified diameter and length below the pile cap to carry a safe working load not less than specified, excluding the cost of steel reinforcement but including the cost of boring, with bentonite solution and temporary casing of appropriate length for setting out and removal of same and the length of the pile to be embedded in the pile cap etc. all complete, including removal of excavated earth with all lifts and leads (Length of pile for payment shall be measured upto bottom of pile cap).500 mm dia piles						
	Boring, providing and installing bored cast-in-situ reinforced cement concrete piles of grade M-25 of						
	Equilisation Tank	24			12.000		288.000
	Filter feild Tank	1			14.000		14.000

Sl No	Specification	No	Length	Width	Depth	Cf	Quantity
	Total						**302.000**
						Total Quantity in metre	**302.000**
16.003	20.2A.1						
	Boring, providing and installation bored cast-in-situ reinforced cement concrete piles of garde M-25 of specified diameter and length below pile cap, to carry a safe working load not less than specified, excluding the cost of steel reinforcement but including the cost of boring with bentonite solution and temporary casing of appropriate length for setting out and removal of same and the length of the pile to be embedded in the pile cap etc. by Crawler mounted, telescopic boom hydraulic pilling Rig all complete, including removal of excavated earth with all its lifts and leads (length of pile for payment shall be measured up to bottom of pile cap). Note: Truck Mounted rotary/TMR/Tube well boring machine shall not be used.600 mm dia piles						
	Boring, providing and installation bored cast-in-situ reinforced cement concrete piles of garde M-25 of						
	Equalization tank	21	10.000				210.000
	MBBR I	16	10.000				160.000
	MBBR II	16	10.000				160.000
	MBBR III	9	12.000				108.000
	MBBR IV	8	12.000				96.000
	Secondary Clarifier	16	12.000				192.000
	sludge thickner	4	12.000				48.000
	chlorine contact tank	1	14.000				14.000
	treated water tank	8	15.000				120.000
	Total						**1108.000**
						Total Quantity in metre	**1108.000**
16.004	5.22.6						
	Steel reinforcement for R.C.C work including straightening, cutting, bending, placing in position and binding all complete upto plinth levelThermo - Mechanically Treated bars of grade Fe-500D or more						
	Steel reinforcement for R.C.C work including straightening, cutting, bending, placing in position and binding all						
	Qunatity as per item No.1,2 &3	1	492.520		120.000		59102.400
	Total						**59102.400**

Sl No	Specification	No	Length	Width	Depth	Cf	Quantity
						Total Quantity in kilogram	**59102.400**
16.005	20.6.2.1						
	Vertical load testing of piles in accordance with IS 2911(Part IV) including installation of loading platform and preparation of pile head or construction of test cap and dismantling of test cap after test etc. complete as per specification & the direction of engineer -in-Charge. Single pile above 50 tonne and upto 100 tonne capacityInitial test						
	Vertical load testing of piles in accordance with IS 2911(Part IV) including installation of loading platform and						
	initial test (2.5times the safe capacity)	4					4.000
	Total						**4.000**
						Total Quantity in per test	**4.000**
16.006	20.6.2.2						
	Vertical load testing of piles in accordance with IS 2911(Part IV) including installation of loading platform and preparation of pile head or construction of test cap and dismantling of test cap after test etc. complete as per specification & the direction of engineer -in-Charge. Single pile above 50 tonne and upto 100 tonne capacityRoutine test						
	Vertical load testing of piles in accordance with IS 2911(Part IV) including installation of loading platform and						
	Routeline test(n test load 1.5 times the safe capacity)	6					6.000
	Total						**6.000**
						Total Quantity in per test	**6.000**
16.007	OD21911/2022-2023						
	site clearence and levelling						
	site clearence and levelling						
	site clearence and levelling	1					1.000
	Total						**1.000**
						Total Quantity in L.S	**1.000**
17	SEWER NETWORK WITH PIPES, MANHOLES, INSPECTION CHAMBERS AND WELLS						
17.001	2.6.1						
	Earth work in excavation by mechanical means (Hydraulic excavator)/manual means over areas (exceeding 30 cm in depth, 1.5 m in width as well as 10 sqm on plan) including disposal of excavated earth, lead up to 50 m and lift up to 1.5 m, disposed earth to be levelled and neatly dressed.All kinds of soil						

Sl No	Specification	No	Length	Width	Depth	Cf	Quantity
	Earth work in excavation by mechanical means (Hydraulic excavator)/manual means over areas						
	For manholes class 1(0.9m dia)	1434	1.900	1.900	1.120		5797.949
	For manholes class 2(1.2 m dia)	471	2.300	2.300	1.450		3612.806
	For manholes class 3(1.5 m dia)	696	2.700	2.700	4.570		23187.449
	Extra depth for lift manholes	66	2.700	2.700	0.500		240.570
	For collection well -1	1	6.500	6.500	9.650	0.790000	322.093
	For collection well -2	1	7.500	7.500	6.650	0.790000	295.509
	For collection well -3	1	6.600	6.600	6.000	0.790000	206.474
	For lift manhole panel board foundation	66	1.000	0.450	0.600	0.790000	14.078
	For sewer chambers	5202	1.300	1.300	1.000		8791.380
	Total						**42468.308**
						Total Quantity in cum	**42468.308**
17.002	4.1.6						
	Providing and laying in position cement concrete of specified grade excluding the cost of centering and shuttering - All work up to plinth level:1:3:6 (1 cement : 3 coarse sand : 6 graded stone aggregate 40 mm nominal size)						
	Providing and laying in position cement concrete of specified grade excluding the cost of centering						
	For manholes-class1(0.9m dia)	1434	1.900	1.900	0.150		776.511
	For manholes-class2(1.2m dia)	471	2.300	2.300	0.150		373.739
	For manholes-class3(1.5m dia)	696	2.700	2.700	0.150		761.076
	For collection well-1	1	6.500	6.500	0.150		6.338
	For collection well-2	1	7.500	7.500	0.150		8.438
	For collection well-3	1	5.600	5.600	0.150		4.704

Sl No	Specification	No	Length	Width	Depth	Cf	Quantity
	For Lift manhole panel board foundation	66	1.000	0.450	0.600		17.820
	For sewer chambers	5202	1.300	1.300	0.150		1318.707
	For anti floation blocks for large pipes	1236	1.000	0.750	0.500		463.500
	For anti floation blocks mediium pipes	520	0.750	0.750	0.500		146.250
	For anti floation blocks for small pipe	1689	0.500	0.500	0.450		190.013
	Forpipe line support bar 6 M	10343	0.300	0.300	0.150		139.631
	Total						**4206.727**
						Total Quantity in cum	**4206.727**
17.003	OD21921/2022-2023						
	(Item 5.37.1+5.34.1) Providing and laying in position ready mixed M-25 grade concrete for reinforced cement concrete work, using cement content as per approved design mix, manufactured in fully automatic batching plant and transported to site of work in transit mixer for all leads, having continuous agitated mixer, manufactured as per mix design of specified grade for reinforced cement concrete work including pumping of R.M.C. from transit mixer to site of laying, excluding the cost of centering, shuttering finishing and reinforcement including cost of admixtures in recommended proportions as per IS: 9103 to accelerate/ retard setting of concrete, improve workability without impairing strength and durability as per direction of the Engineer - in -charge. Note:- Cement content considered in this item is @330 kg/cum. Excess /less cement used as per design mix is payable/recoverable separately. All wiork upto plinth level Extra for providing richer mixes at all floor levels. Note:- Excess/less cement over the specified cement content used is payable/ recoverable separately. Providing M-30 grade concrete instead of M-25 grade BMC/RMC. (Note:- Cement content considered in M-30 is @ 340 kg/cum). 						
	Deduction						
	Deduct manhole cover(600mm dia)	-2601	0.280		0.200		-145.656
	Total						**-145.656**
	Providing and laying in position ready mixed M-25 grade concrete for reinforced cement						
	Base slab-manhole class-1	1434	1.900	1.900	0.350		1811.859
	Base slab-manhole class2	471	2.300	2.300	0.400		996.636

Sl No	Specification	No	Length	Width	Depth	Cf	Quantity
	Base slab-manhole class-3	696	2.700	2.700	0.450		2283.228
	Base slab-collection well-1	1	6.500	6.500	0.450		19.013
	Base slab-collection well-2	1	7.500	7.500	0.450		25.313
	Base slab-collection well-3	1	5.500	5.500	0.450		13.613
	Walls-manhole class-1	1434	0.900		1.120		1445.472
	Walls-manhole class-2	471	1.410		1.450		962.960
	Walls-manhole class-3	696	2.030		4.570		6456.862
	Extra depth for lift manholes	66	2.030		0.500		66.990
	Walls collection well-1	1	8.410		6.300		52.983
	Walls collection well-2	1	7.000		9.000		63.000
	Walls collection well-3	1	21.200	0.450	4.000		38.160
	Top slab-manhole-class-1	1434	1.540		0.200		441.672
	Top slab-manhole-class-2	471	2.540		0.200		239.268
	Top slab-manhole-class-3	696	3.800		0.200		528.960
	Chamber slab	5202	1.000	1.000	0.200		1040.400
	Chamber walls	5202	2.400	0.200	0.800		1997.568
	Chamber cover slab	5202	1.000	1.000	0.100		520.200
	Total						**19004.157**
						Total Quantity in cum	**18858.501**
17.004	5.22.6						
	Steel reinforcement for R.C.C work including straightening, cutting, bending, placing in position and binding all complete upto plinth levelThermo - Mechanically Treated bars of grade Fe-500D or more						
	Steel reinforcement for R.C.C work including straightening, cutting, bending, placing in positioSteel reinforcement for R.C.C work including straightening, cutting, bending, placing in positi						

Sl No	Specification	No	Length	Width	Depth	Cf	Quantity
	Quantity as per item no .3	1	18858.505		110.000		2074435.550
	Total						**2074435.550**
						Total Quantity in kilogram	**2074435.550**
17.005	4.12						
	Extra for providing and mixing water proofing material in cement concrete work in doses by weight of cement as per manufacturer's specification .						
	Extra for providing and mixing water proofing material in cement concrete work in doses by weight of cement as						
	Quantity as per item no 3	1	18858.505		340.000		6411891.700
	Total						**6411891.700**
						Total Quantity in kg	**6411891.700**
17.006	5.9.1						
	Centering and shuttering including strutting, etc. and removal of form for:Foundations, footings, bases of columns, etc for mass concrete						
	Centering and shuttering including strutting, etc. and removal of form for:						
	for manholes - class1	1434	7.600	0.350			3814.440
	for manholes - class2	471	9.200	0.400			1733.280
	for manholes - class3	696	10.800	0.450			3382.560
	for collection well -1	1	29.200	0.450			13.140
	for collection well -2	1	25.200	0.450			11.340
	for collection well -3	1	17.300	0.450			7.785
	for sewer chambers	5202	4.000	0.200			4161.600
	Total						**13124.145**
						Total Quantity in sqm	**13124.145**
17.007	5.9.2						
	Centering and shuttering including strutting, etc. and removal of form for:Walls (any thickness) including attached pilasters, butteresses, plinth and string courses etc.						
	For walls out side						

Sl No	Specification	No	Length	Width	Depth	Cf	Quantity
	for manhole class -1	1434	4.400	1.120			7066.752
	for manhole class -2	471	5.650	1.450			3858.668
	for manhole class -3	696	6.910	4.570			21978.775
	Extra depth for lift manholes	66	6.910	0.500			228.030
	for collection -1	1	20.100	6.300			126.630
	for collection -2	1	16.960	9.000			152.640
	for collection -3	1	15.700	4.000			62.800
	for sewer chambers	5202	4.000	0.800			16646.400
	Total						**50120.695**
	For walls inside						
	for manholes class -1	1434	2.830	1.120			4545.206
	for manholes class -2	471	3.770	1.450			2574.722
	for manholes class -3	696	4.710	4.570			14981.191
	for collection -1	1	17.270	6.300			108.801
	for collection 2	1	14.130	9.000			127.170
	for collection 3	1	18.530	4.000			74.120
	for sewer chambers	5202	2.400	0.800			9987.840
	Total						**32399.050**
						Total Quantity in sqm	**82519.745**
17.00	22.23.1						

Sl No	Specification	No	Length	Width	Depth	Cf	Quantity
	Providing and applying integral crystalline slurry of hydrophilic in nature for waterproofing treatment to the RCC structures like retaining walls of the basement, water tanks, roof slabs, podiums, reservior, sewage & water treatment plant, tunnels / subway and bridge deck etc., prepared by mixing in the ratio of 5 : 2 (5 parts integral crystalline slurry : 2 parts water) for vertical surfaces and 3 : 1 (3 parts integral crystalline slurry : 1 part water) for horizontal surfaces and applying the same from negative (internal) side with the help of synthetic fiber brush. The material shall meet the requirements as specified in ACI-212-3R-2010 i.e by reducing permeability of concrete by more than 90% compared with control concrete as per DIN 1048 and resistant to 16 bar hydrostatic pressure on negative side. The crystalline slurry shall be capable of self-healing of cracks up to a width of 0.50mm. The work shall be carried out all complete as per specification and the direction of the engineerin- charge. The product performance shall carry guarantee for 10 years against any leakage.For vertical surface two coats @0.70 kg per sqm						
	Inside wall						
	For manhole class -1	1434	2.830	1.120			4545.206
	For manhole class -2	471	3.770	1.450			2574.722
	For manhole class -3	696	4.710	4.570			14981.191
	Extra for lift manhole	66	4.710	0.500			155.430
	For collection wall 1	1	17.270	6.300			108.801
	For collection wall 2	1	14.130	9.000			127.170
	For collection wall 3	1	15.700	4.000			62.800
	For sewer chambers	5202	2.400	0.800			9987.840
	Total						**32543.160**
						Total Quantity in sqm	**32543.160**
17.00	22.23.2						

Sl No	Specification	No	Length	Width	Depth	Cf	Quantity
	Providing and applying integral crystalline slurry of hydrophilic in nature for waterproofing treatment to the RCC structures like retaining walls of the basement, water tanks, roof slabs, podiums, reservior, sewage & water treatment plant, tunnels / subway and bridge deck etc., prepared by mixing in the ratio of 5 : 2 (5 parts integral crystalline slurry : 2 parts water) for vertical surfaces and 3 : 1 (3 parts integral crystalline slurry : 1 part water) for horizontal surfaces and applying the same from negative (internal) side with the help of synthetic fiber brush. The material shall meet the requirements as specified in ACI-212-3R-2010 i.e by reducing permeability of concrete by more than 90% compared with control concrete as per DIN 1048 and resistant to 16 bar hydrostatic pressure on negative side. The crystalline slurry shall be capable of self-healing of cracks up to a width of 0.50mm. The work shall be carried out all complete as per specification and the direction of the engineerin- charge. The product performance shall carry guarantee for 10 years against any leakage.For horizontal surface one coat @1.10 kg per sqm.						
	Bottom slab						
	For manhole class 1	1434	0.640				917.760
	For manhole class 2	471	1.130				532.230
	For manhole class 3	696	1.770				1231.920
	For collection well 1	1	23.760				23.760
	For collection well 2	1	15.900				15.900
	For collection well 3	1	27.340				27.340
	For sewer chambers	5202	0.360				1872.720
	Total						**4621.630**
						Total Quantity in sqm	**4621.630**
17.010	2.25						
	Filling available excavated earth (excluding rock) in trenches, plinth, sides of foundation etc. in layers not exceeding 20 cm in depth, consolidating each deposited layer by ramming and watering, lead up to 50 m and lift up to 1.5 m.						
	Filling available excavated earth (excluding rock) in trenches, plinth, sides of foundation etc. in layers not(DEDUCTION)						
	PCC	-1	4206.728				-4206.728
	Bottom slab - manholes+ chambers	-1	6132.124				-6132.124
	Bottom slab - collection well	-1	44.326				-44.326

Sl No	Specification	No	Length	Width	Depth	Cf	Quantity
	walls - manholes+chambers	-1	10862.863				-10862.863
	walls -collection well	-1	115.983				-115.983
	Top slab-manholes+chambers	-1	1730.102				-1730.102
	Total						**-23092.126**
	Filling available excavated earth (excluding rock) in trenches, plinth, sides of foundation etc. in layers not						
	Quantity as per item no 1	1			42691.112		42691.112
	Total						**42691.112**
						Total Quantity in cum	**19598.986**
17.011	100.98.138						
	Supply of HDPE Pipe PE 100 (IS 4984/1995), 8kg, 160mm Outer Dia.						
	Supply of HDPE Pipe PE 100 (IS 4984/1995), 8kg, 160mm Outer Dia.						
	For connection from chamber to manholes	5202	6.000				31212.000
	Total						**31212.000**
						Total Quantity in metre	**31212.000**
17.012	100.98.141						
	Supply of HDPE Pipe PE 100 (IS 4984/1995), 8kg, 225mm Outer Dia.						
	Supply of HDPE Pipe PE 100 (IS 4984/1995), 8kg, 225mm Outer Dia.						
	For sewer net work	1	58006.000				58006.000
	Total						**58006.000**
						Total Quantity in metre	**58006.000**
17.013	100.98.143						
	Supply of HDPE Pipe PE 100 (IS 4984/1995), 8kg, 280mm Outer Dia.						
	Supply of HDPE Pipe PE 100 (IS 4984/1995), 8kg, 280mm Outer Dia.						
		1	2510.000				2510.000

Sl No	Specification	No	Length	Width	Depth	Cf	Quantity
	Total						**2510.000**
						Total Quantity in metre	**2510.000**
17.014	100.98.145						
	Supply of HDPE Pipe PE 100 (IS 4984/1995), 8kg, 355mm Outer Dia.						
	Supply of HDPE Pipe PE 100 (IS 4984/1995), 8kg, 355mm Outer Dia.						
	For sewer network	1	2265.000				2265.000
	Total						**2265.000**
						Total Quantity in metre	**2265.000**
17.015	100.98.161						
	Supply of HDPE Pipe PE 100 (IS 4984/1995), 10kg, 225mm Outer Dia.						
	Supply of HDPE Pipe PE 100 (IS 4984/1995), 10kg, 225mm Outer Dia.						
	For sewer network	1	2897.000				2897.000
	Total						**2897.000**
						Total Quantity in metre	**2897.000**
17.016	100.98.163						
	Supply of HDPE Pipe PE 100 (IS 4984/1995), 10kg, 280mm Outer Dia.						
	Supply of HDPE Pipe PE 100 (IS 4984/1995), 10kg, 280mm Outer Dia.						
	for sewer net work	1	868.000				868.000
	Total						**868.000**
						Total Quantity in metre	**868.000**
17.017	100.98.165						
	Supply of HDPE Pipe PE 100 (IS 4984/1995), 10kg, 355mm Outer Dia.						
	Supply of HDPE Pipe PE 100 (IS 4984/1995), 10kg, 355mm Outer Dia.						
	For sewer network	1	443.000				443.000
	Total						**443.000**
						Total Quantity in metre	**443.000**
17.018	100.98.166						
	Supply of HDPE Pipe PE 100 (IS 4984/1995), 10kg, 400mm Outer Dia.						
	Supply of HDPE Pipe PE 100 (IS 4984/1995), 10kg, 400mm Outer Dia.						
	For sewer network	1	513.000				513.000
	Total						**513.000**
						Total Quantity in metre	**513.000**
17.01	100.98.167						

Sl No	Specification	No	Length	Width	Depth	Cf	Quantity
	Supply of HDPE Pipe PE 100 (IS 4984/1995), 10kg, 450mm Outer Dia.						
	Supply of HDPE Pipe PE 100 (IS 4984/1995), 10kg, 450mm Outer Dia.						
	For sewer network	1	924.000				924.000
	Total						**924.000**
						Total Quantity in metre	**924.000**
17.020	100.98.119						
	Supply of DI K9 Pipe Conforming to IS 8329/2000, 300mm Dia.						
	Supply of DI K9 Pipe Conforming to IS 8329/2000, 300mm Dia.						
		1	180.000				180.000
	Total						**180.000**
						Total Quantity in metre	**180.000**
17.021	100.98.120						
	Supply of DI K9 Pipe Conforming to IS 8329/2000, 350mm Dia.						
	Supply of DI K9 Pipe Conforming to IS 8329/2000, 350mm Dia.						
		1	150.000				150.000
	Total						**150.000**
						Total Quantity in metre	**150.000**
17.022	OD21922/2022-2023						
	supplying of DWC HDPE pipes of 600mm dia						
	supplying of DWC HDPE pipes of 600mm dia						
		1	3708.000				3708.000
	Total						**3708.000**
						Total Quantity in metre	**3708.000**
17.023	100.1.1						
	Excavating trenches of required width for pipes, cables, etc., including excavation for sockets, and dressing of sides, ramming of bottoms, depth up to 1.5m, including getting out the excavated soil, and then returning the soil as required, in layers not exceeding 20cm in depth, including consolidating each deposited layer by ramming, watering, etc., and disposing of surplus excavated soil as directed, within a lead of 50m, in all kinds of soil.						
	Excavating trenches of required width for pipes, cables, etc., including excavation for sockets,						
		1	114369.000				114369.000
	Total						**114369.000**
						Total Quantity in cum	**114369.000**
17.02	100.1.2						

Sl No	Specification	No	Length	Width	Depth	Cf	Quantity
	Excavating trenches of required width for pipes, cables, etc., including excavation for sockets, and dressing of sides, ramming of bottoms, depth exceeding 1.5m but not exceeding 3m, including getting out the excavated soil, and then returning the soil as required, in layers not exceeding 20cm in depth, including consolidating each deposited layer by ramming, watering, etc., and disposing of surplus excavated soil as directed, within a lead of 50m, in all kinds of soil.						
	For depth 1.50-3.00m						
		1	48149.000				48149.000
	Total						**48149.000**
						Total Quantity in cum	**48149.000**
17.025	100.1.3						
	Excavating trenches of required width for pipes, cables, etc., including excavation for sockets, and dressing of sides, ramming of bottoms, depth exceeding 3m but not exceeding 4.5 m, including getting out the excavated soil, and then returning the soil as required, in layers not exceeding 20 cm in depth, including consolidating each deposited layer by ramming, watering, etc., and disposing of surplus excavated soil as directed, within a lead of 50m, in all kinds of soil.						
	For depth 3-4.5m						
		1	24339.000				24339.000
	Total						**24339.000**
						Total Quantity in cum	**24339.000**
17.026	100.10.5						
	Laying HDPE pipes (IS : 4984) on land portion including conveying within initial lead and aligning the pipes, electro-fusion welding using automatic or semi-automatic electrofusion machines, testing the pipeline thus fabricated to suit the hydraulic working pressure and after testing, aligning the pipeline, lowering the pipe in position into the trenches already made, testing the line to suitable pressure with potable water before back filling and levelling the trenches including all labour charge, hire for appliances etc., complete but excluding cost of pipe and fittings: 160mm Nominal Outside Diameter Pipes.						
	Laying HDPE pipes (IS : 4984) on land portion including conveying within initial lead and aligning the pipe						
	For sewer net work -160mm OD PE pipes	1	31212.000				31212.000
	Total						**31212.000**
						Total Quantity in metre	**31212.000**

Sl No	Specification	No	Length	Width	Depth	Cf	Quantity
17.027	100.10.8						
	Laying HDPE pipes (IS : 4984) on land portion including conveying within initial lead and aligning the pipes, electro-fusion welding using automatic or semi-automatic electrofusion machines, testing the pipeline thus fabricated to suit the hydraulic working pressure and after testing, aligning the pipeline, lowering the pipe in position into the trenches already made, testing the line to suitable pressure with potable water before back filling and levelling the trenches including all labour charge, hire for appliances etc., complete but excluding cost of pipe and fittings: 225mm Nominal Outside Diameter Pipes.						
	For sewer network -225mm OD PE pipes						
	Sewernet work	1	60903.000				60903.000
	Total						**60903.000**
						Total Quantity in metre	**60903.000**
17.028	100.10.10						
	Laying HDPE pipes (IS : 4984) on land portion including conveying within initial lead and aligning the pipes, electro-fusion welding using automatic or semi-automatic electrofusion machines, testing the pipeline thus fabricated to suit the hydraulic working pressure and after testing, aligning the pipeline, lowering the pipe in position into the trenches already made, testing the line to suitable pressure with potable water before back filling and levelling the trenches including all labour charge, hire for appliances etc., complete but excluding cost of pipe and fittings: 280mm Nominal Outside Diameter Pipes.						
	For sewer network-280mm OD PE pipes						
	sewer network	1	3378.000				3378.000
	Total						**3378.000**
						Total Quantity in metre	**3378.000**
17.029	100.10.12						
	Laying HDPE pipes (IS : 4984) on land portion including conveying within initial lead and aligning the pipes, electro-fusion welding using automatic or semi-automatic electrofusion machines, testing the pipeline thus fabricated to suit the hydraulic working pressure and after testing, aligning the pipeline, lowering the pipe in position into the trenches already made, testing the line to suitable pressure with potable water before back filling and levelling the trenches including all labour charge, hire for appliances etc., complete but excluding cost of pipe and fittings: 355mm Nominal Outside Diameter Pipes.						
	Laying HDPE pipes (IS : 4984) on land portion including conveying within initial lead and aligning the pipes,						
	For sewer network-355mm OD PE pipes	1	2265.000				2265.000
	Total						**2265.000**
						Total Quantity in metre	**2265.000**

Sl No	Specification	No	Length	Width	Depth	Cf	Quantity
17.030	100.10.13						
	Laying HDPE pipes (IS : 4984) on land portion including conveying within initial lead and aligning the pipes, electro-fusion welding using automatic or semi-automatic electrofusion machines, testing the pipeline thus fabricated to suit the hydraulic working pressure and after testing, aligning the pipeline, lowering the pipe in position into the trenches already made, testing the line to suitable pressure with potable water before back filling and levelling the trenches including all labour charge, hire for appliances etc., complete but excluding cost of pipe and fittings: 400mm Nominal Outside Diameter Pipes.						
	Laying HDPE pipes (IS : 4984) on land portion including conveying within initial lead and aligning the pipes,						
		1	513.000				513.000
	Total						**513.000**
						Total Quantity in metre	**513.000**
17.031	100.10.14						
	Laying HDPE pipes (IS : 4984) on land portion including conveying within initial lead and aligning the pipes, electro-fusion welding using automatic or semi-automatic electrofusion machines, testing the pipeline thus fabricated to suit the hydraulic working pressure and after testing, aligning the pipeline, lowering the pipe in position into the trenches already made, testing the line to suitable pressure with potable water before back filling and levelling the trenches including all labour charge, hire for appliances etc., complete but excluding cost of pipe and fittings: 450mm Nominal Outside Diameter Pipes.						
	Foe sewer network- 450mm OD PE pipes						
		1	924.000				924.000
	Total						**924.000**
						Total Quantity in metre	**924.000**
17.032	OD21923/2022-2023						
	Laying of DWC (Double walll corrugated)PE pipes of 600mm diameter						
	Laying 600mm DWC Pipes						
	Laying 600mm DWC Pipes	1	3708.000				3708.000
	Total						**3708.000**
						Total Quantity in metre	**3708.000**
17.033	OD21924/2022-2023						
	Laying 300 DI pumping mains for crossing railway lines by HDD method						
	Laying 300 DI pumping mains for crossing railway lines by HDD method						
		1					1.000
	Total						**1.000**
						Total Quantity in L.S	**1.000**
17.034	OD21925/2022-2023						
	Laying 350 DI pumping mains for crossing railway lines by HDD method						

Sl No	Specification	No	Length	Width	Depth	Cf	Quantity
	Laying 350 DI pumping mains for crossing railway lines by HDD method						
		1					1.000
	Total						**1.000**
						Total Quantity in L.S	**1.000**
17.035	15.43.2						
	Dismantling manually / by mechanical means including stacking of serviceable material and disposal of unserviceable material within 50 metres lead as per direction of Engineer -in-Charge:Bituminous road						
	Dismantling manually / by mechanical means including stacking of serviceable material and disposal						
	Dismantling bituminous roads for laying sewer	1	73000.000				73000.000
	Total						**73000.000**
						Total Quantity in sqm	**73000.000**
17.036	OD21926/2022-2023						
	Supply and fixing 300 mm butterfly valves						
	Supply and fixing 300 mm butterfly valves						
	For pumping lines	6					6.000
	Total						**6.000**
						Total Quantity in L.S	**6.000**
17.037	OD21927/2022-2023						
	Road restoration charges for excavated protions of Bitumen Macadam and Bitumen Concrete (BMBC), interlocked tiled surface and municipal roads						
	Deduction						
	Deduct for manholes	-1	180.000	0.280			-50.400
	Total						**-50.400**
	For sewer network including manholes						
	BM/BC roads	1	5645.000	1.000	1.500		8467.500
	Total						**8467.500**
						Total Quantity in sqm	**8417.100**
17.038	OD21928/2022-2023						
	100 mm thick interlocking tiled road						
	100 mm thick interlocking tiled road						
		1	22163.000	1.000			22163.000

Sl No	Specification	No	Length	Width	Depth	Cf	Quantity
	Total						**22163.000**
	Deduction						
	Deduct for manholes	-1	738.000	0.280			-206.640
	Total						**-206.640**
						Total Quantity in sqm	**21956.360**
17.039	OD21929/2022-2023						
	20 mm close graded chipping carpet roads						
	20 mm close graded chipping carpet roads						
		1	44326.000				44326.000
	Total						**44326.000**
	Deduction						
	Deduct for manholes	-1	1477.000	0.280			-413.560
	Total						**-413.560**
						Total Quantity in sqm	**43912.440**
17.040	OD21930/2022-2023						
	Providing steel sheet shoring to the sides of the trenches to depths of above 4.00 m but not exceeding 6.00m using 6 mm M.S. sheet 0.50 M wide stiffen on edges with 50 mm x 50mm x 6 mm M.S. angles driving down vertically on either side one after another in lines and levels with suitable pile driving equipments and accessories to a maximum depth of 0.50 M below the bottom of the proposed excavation 0.5 M above ground level suitably braced by horizontal walling pieces at 75 x 150 mm x 8 mm angles on either side at intervals not exceeding 1.50M and horizontal screw jack type struts at 1.50M intervals and maintaining the shoring till the pipes are laid and works are completed, dismantling, cleaning and restacking for reuse including all labour, hire charges and conveyance for equipments, tools and plants and sundries etc. complete.						
	Providing steel sheet shoring to the sides of the trenches to depths of above 4.00 m but not exceeding 6.00m						
	For trenches above 2.0m deopth	1	54000.000				54000.000
	Total						**54000.000**
						Total Quantity in sqm	**54000.000**
17.041	OD21931/2022-2023						
	Taking connection for manholes and chambers						

Sl No	Specification	No	Length	Width	Depth	Cf	Quantity
	Taking connection for manholes and chambers						
		10404	1.000				10404.000
	Total						**10404.000**
						Total Quantity in 1 nos	**10404.000**
17.042	OD21932/2022-2023						
	Connection fee for individual houses						
	Connection fee for individual houses						
		1	7000.000				7000.000
	Total						**7000.000**
						Total Quantity in 1 nos	**7000.000**
17.043	OD21933/2022-2023						
	Fencing one side of trenches, 1.50 m height with two rows of 10 cm plastic caution tape in vertical casuarina pole (girth 15cm to 24cm) fixed at 2 m intervals.						
	Fencing one side of trenches, 1.50 m height with two rows of 10 cm plastic caution tape in vertical casuarina pole						
		2	36000.000				72000.000
	Total						**72000.000**
						Total Quantity in metre	**72000.000**
17.044	19.18.3						
	Supplying and fixing C.I with out frame for manholes:560 mm diameter (heavy duty) the weight of the cover to be not less than 108 kg						
	Supplying and fixing C.I with out frame for manholes: 560 mm diameter						
		2601	1.000				2601.000
	Total						**2601.000**
						Total Quantity in each	**2601.000**
18	ECO-FRIENDLY UNITS						
18.001	OD21934/2022-2023						
	Green Belt, Special Exterior Wall Garden and Landscaping						
	Green Belt, Special Exterior Wall Garden and Landscaping						
	Green Belt, Special Exterior Wall Garden and Landscaping	1					1.000
	Total						**1.000**

Sl No	Specification	No	Length	Width	Depth	Cf	Quantity
						Total Quantity in 1 nos	**1.000**
18.002	OD21935/2022-2023						
	Facility for Recycling Purposes						
	Facility for Recycling Purposes						
	Facility for Recycling Purposes	1					1.000
	Total						**1.000**
						Total Quantity in 1 nos	**1.000**
18.003	OD21936/2022-2023						
	Building with Trussed Roof and Eco-friendly walls						
	Building with Trussed Roof and Eco-friendly walls						
	wells	2					2.000
	Total						**2.000**
						Total Quantity in 1 nos	**2.000**
18.004	OD21937/2022-2023						
	Building with Trussed Roof and Eco-friendly walls						
	Building with Trussed Roof and Eco-friendly walls						
	STP	1					1.000
	Total						**1.000**
						Total Quantity in 1 nos	**1.000**
18.005	OD21938/2022-2023						
	Equipment, Laboratory items, Furniture and Computer system for CIPS of IoT						
	Equipment, Laboratory items, Furniture and Computer system for CIPS of IoT						
	Equipment, Laboratory items, Furniture and Computer system for CIPS of IoT	1					1.000
	Total						**1.000**
						Total Quantity in 1 nos	**1.000**
18.006	OD21939/2022-2023						
	Supply and installation of steel cover slab prefabricated for equalization tank						
	Supply and installation of steel cover slab prefabricated for equalization tank						
	Supply and installation of steel cover slab prefabricated for equalization tank	1					1.000
	Total						**1.000**

Sl No	Specification	No	Length	Width	Depth	Cf	Quantity
						Total Quantity in 1 nos	**1.000**
19	MECHANICAL ITEMS						
19.001	OD21940/2022-2023						
	Sewage transfer pump - Supply, Installation, Commissioning, testing and trial run of submersible sewage handling type pump, with specified discharge and head and of reputed make.						
	Sewage transfer pump - Supply, Installation, Commissioning, testing and trial run of submersible						
	Power of pumb required	25	2.000				50.000
	Total						**50.000**
						Total Quantity in HP (Horse power)	**50.000**
19.002	OD21941/2022-2023						
	Bar Screen-coarse- Supply and installation, of manual bar screen, MS – epoxy frame to be fitted in bar screen chamber of specified width, with MS flat bars and 20 mm c/c gap between bars. The frame to be mounted on the chamber and provided with MS rake arm with racks for removal of collected solids and trough to be provided for transfer of the collected solids.Flow Rate and height should be as specified. Angle of Inclination: 45 Degree,Spacing: 20mm						
	Bar Screen-coarse- Supply and installation						
	coarse-screen for STP	2					2.000
	coarse-screen for CTU	1					1.000
	For lift station	66					66.000
	Total						**69.000**
						Total Quantity in 1 nos	**69.000**
19.003	OD21942/2022-2023						
	Bar Screen-fine- Supply and installation, of manual bar screen, MS – epoxy frame to be fitted in bar screen chamber of specified width, with MS flat bars and 20 mm c/c gap between bars. The frame to be mounted on the chamber and provided with MS rake arm with racks for removal of collected solids and trough to be provided for transfer of the collected solids.Flow Rate and height should be as specified. Angle of Inclination: 45 Degree,Spacing: 6mm						
	Bar screen-fine-supply & installation						
	Width of screen channel	2					2.000
	Total						**2.000**
						Total Quantity in 1 nos	**2.000**
19.00	OD21943/2022-2023						

Sl No	Specification	No	Length	Width	Depth	Cf	Quantity
	MBBR media- Supplying and fixing of non-clogging freely moving biomass media of polypropylene construction Sp.Gravity 0.93 for MBBR reactor with required specific surface area, length 10-20 mm, dia 20-25 mm complete as per technical specification or as directed by Engineer in Charge						
	MBBR media- Supplying and fixing of non-clogging freely moving biomass media of polypropylene construction						
	Volume of carrier	1	1182.000				1182.000
	Total						**1182.000**
						Total Quantity in cum	**1182.000**
19.005	OD21944/2022-2023						
	Air Blower Supply,erection, testing and commissioning of twin lobe air blower for indoor application complete with acoustic canopy, air filter, motor of 1500 rpm , pulleys, pressure gauges, pressure relief valve, acoustic hood, suction silencer with suitable flanges, common motor and compressor base frame with motor belt tightening arrangement interconnecting line with flanges including all accessories complete as per technical specification or as Directed by Engineer in Charge.						
	Air Blower Supply,erection, testing and commissioning of twin lobe air blower for indoor application complete						
	Power of motor	3	200.000				600.000
	Total						**600.000**
						Total Quantity in HP (Horse power)	**600.000**
19.006	OD21945/2022-2023						
	Bubble Diffuser for MBBR- Fine Bubble Diffuser Supplying and fixing of retrievable type fine bubble diffusers of required dia and length, Ethylene Propylene Diene Monomer (EPDM) make with SStee1"x1",SS lifting hook 8 mm, SS foundation bolt 6 mm, SS C clamp suitable for 1"O.D, hose, PP Rope, PP swivel nut, PP sleeve, Silicone Washer, SS hos clamp, RCC block complete as per technical specification compatible for specified air flow						
	Bubble Diffuser for MBBR- Fine Bubble Diffuser Supplying and fixing of retrievable type fine bubble diffusers						
	Bubble Diffuser for MBBR	3					3.000
	Total						**3.000**
						Total Quantity in 1 nos	**3.000**
19.007	OD21946/2022-2023						
	Air Grid Pipe Supply and installation of air pipes (HDPE) assembly into valves and other accessories as required for the blowers to various tanks as a complete unit						
	Air Grid Pipe Supply and installation of air pipes (HDPE) assembly into valves and other accessories as required						

Sl No	Specification	No	Length	Width	Depth	Cf	Quantity
	Air Grid Pipe Supply and installation of air pipes (HDPE) assembly into valves and other accessories as required	3					3.000
	Total						**3.000**
						Total Quantity in 1 nos	**3.000**
19.008	OD21947/2022-2023						
	Plate settler media- Media to be of UV stabilized stianless steel, 750 mm height and about 1.0 mm thick. The plan settling area should be between 10 – 12 m2/m3 /day minimum at 60 degree slope. The media is to be provided along with lock nuts as required.						
	Plate settler media- Media to be of UV stabilized stianless steel, 750 mm height and about 1.0 mm thick.						
	Total contact area	1	1058.400				1058.400
	Total						**1058.400**
						Total Quantity in sqm	**1058.400**
19.009	OD21948/2022-2023						
	Electromagnetic Flow meter,pressure and quality sensors- Supply and erection of electromagnetic flow meter, pressure and quality sensors compatible to IoT and central control system with flow recorder, digital flow/quality/pressure indicator, flow/quality/pressure integrator with sensors, totaliser, transmittal and display arrangements and all accessories including housing arrangements, etc. complete to fix in the incoming pipeline to STP or at the Screen channel as directed by the Engineer in Charge						
	Electromagnetic Flow meter,pressure and quality sensors- Supply and erection of electromagnetic flow meter,						
	STP,Lifting stations & wells	70					70.000
	Total						**70.000**
						Total Quantity in 1 nos	**70.000**
19.010	OD21949/2022-2023						
	Filter feed pump - Supply, Installation, Commissioning, testing and trial run of submersible filtered water handling type pump, with specified discharge and head and of reputed make.						
	Filter feed pump - Supply, Installation, Commissioning, testing and trial run of submersible filtered water handling						
	Power of pump required	3	35.500				106.500
	Total						**106.500**
						Total Quantity in HP (Horse power)	**106.500**

Sl No	Specification	No	Length	Width	Depth	Cf	Quantity
19.011	OD21950/2022-2023						
	Pressure Sand Filter- Supply, installation and erection, testing and commissioning of of Pressure Sand Filter - MS vessel construction. Filter to be of MS construction with multiport valve for operations. Suitable stand / support should be provided along with the filter. Filtration rate should not be greater than 12 m3/hour/m2 of the filtration area. Dirt loading capacity to be sufficient to initiate backwash once in 8 hours i.e. once / shift. Filter to have inlet and outlet piping, inlet and outlet for backwash and air vent. Sand filter to be fitted with pressure guage at inlet and outlet. Sand filter main header is to be fitted with flow meter – turbine type / rotameter type with range up to minimum of 125% of the rated flow through the pipe line. Media to consist of graded pebble, coarse and fine sand. Depth of media to be as per recommendations provided in CPHEEO manual and all relevant IS Codes of prectice. Cost includes supporting foundation.						
	Pressure Sand Filter- Supply, installation and erection, testing and commissioning of of Pressure Sand Filter						
	Flow	4					4.000
	Total						**4.000**
						Total Quantity in 1 nos	**4.000**
19.012	OD21951/2022-2023						
	Carbon Filter- Supply, Installation and erection, testing and comitioning of Activated Carbon Filter - MS composite vessel construction. Filter to be of MS construction with multiport valve for operations. Suitable stand / support should be provided along with the filter. Filtration rate should not be greater than 10 m3/hour/m2 of the filtration area. Filter to have inlet and outlet piping, inlet and outlet for backwash and air vent. Carbon filter to be fitted with pressure guage at outlet. Media to consist of graded pebble, coarse, fine sand and activated carbon. Depth of media to be as per recommendations provided in CPHEEO manual. Activated carbon should be of high quality for removal of impurities and to be used for waste water purification. Cost includes for foundation also.						
	Carbon Filter- Supply, Installation and erection, testing and comitioning of Activated Carbon Filter						
	Flow	4					4.000
	Total						**4.000**
						Total Quantity in 1 nos	**4.000**
19.013	OD21952/2022-2023						
	Alum and Lime Dosing System- Supply, installation, commitioning and testing of Alum dosing tank having capacity 50 litre in LLDPE/ FRP/PP material and alum dosing electronic metering type pump of 1-3 LPH range with 2.5 bar working pressure						
	Alum and Lime Dosing System						
	Alum and Lime Dosing System	4					4.000
	Total						**4.000**
						Total Quantity in 1 nos	**4.000**
19.01	OD21953/2022-2023						

Sl No	Specification	No	Length	Width	Depth	Cf	Quantity
	Hypo Dosing System - Supply, installation, commitioning and testing of Hypo dosing tank having capacity 50lit in LLDPE/ FRP/PP material and hypo dosing electronic metering type pump of 1-3lph range with 2 bar working pressure						
	Hypo Dosing System						
	Hypo Dosing System	2					2.000
	Total						**2.000**
						Total Quantity in 1 nos	**2.000**
19.015	OD21954/2022-2023						
	Odour control unit for co-treatment unit and STP						
	Odour control unit for co-treatment unit and STP						
	Odour control unit for co-treatment unit and STP	2					2.000
	Total						**2.000**
						Total Quantity in 1 nos	**2.000**
19.016	OD21955/2022-2023						
	Sludge transfer to thickener pump - Supply, Installation, Commissioning, testing and trial run of submersible sewage handling type pump, with specified discharge and head and of reputed make.						
	Sludge transfer to thickener pump						
	Sludge transfer to thickener pump	2	2.500				5.000
	Total						**5.000**
						Total Quantity in HP (Horse power)	**5.000**
19.017	OD21956/2022-2023						
	Sludge transfer to centrifuge pump of screw type - Supply, Installation, Commissioning, testing and trial run of submersible sewage handling type pump, with specified discharge and head and of reputed make.						
	Sludge transfer to centrifuge pump of screw type						
	Sludge transfer to centrifuge pump of screw type	2	1.000				2.000
	Total						**2.000**
						Total Quantity in HP (Horse power)	**2.000**
19.018	OD21957/2022-2023						
	Filter backwash pumps - Supply, Installation, Commissioning, testing and trial run of filter backwash pump, with specified discharge and head and of reputed makewith all accessories.						

Sl No	Specification	No	Length	Width	Depth	Cf	Quantity
	power of pumb required						
	power of pumb required	2	2.000				4.000
	Total						**4.000**
						Total Quantity in HP (Horse power)	**4.000**
19.019	OD21958/2022-2023						
	Filtrate cum dilution pump to equalisation tank						
	Filtrate cum dilution pump to equalisation tank						
	Power of pump required	2	25.000				50.000
	Total						**50.000**
						Total Quantity in HP (Horse power)	**50.000**
19.020	OD21959/2022-2023						
	Recycled water transfer pump for dilution tank						
	Recycled water transfer pump for dilution tank						
	Power of pump required	2	2.000				4.000
	Total						**4.000**
						Total Quantity in HP (Horse power)	**4.000**
19.021	OD21960/2022-2023						
	Sewage transfer pump - Supply, Installation, Commissioning, testing and trial run of submersible sewage handling type pump, with specified discharge and head and of reputed make.						
	Sewage transfer pump - Supply, Installation, Commissioning, testing and trial run of submersible						
	Total HP for Pumps in Zone-1 with 1no stand by	2	192.500				385.000
	Zone-2	2	26.500				53.000
	Zone-3	2	54.500				109.000
	Total						**547.000**
						Total Quantity in HP (Horse power)	**547.000**
19.022	OD21961/2022-2023						
	Supply and installation of centrifuge including foundation						
	Supply and installation of centrifuge including foundation						
	Supply and installation of centrifuge including foundation	2					2.000
	Total						**2.000**

Sl No	Specification	No	Length	Width	Depth	Cf	Quantity
						Total Quantity in 1 nos	**2.000**
19.023	OD21962/2022-2023						
	Supply and installation of mixing equipment for de-nitrification tank						
	Supply and installation of mixing equipment for de-nitrification tank						
	Supply and installation of mixing equipment for de-nitrification tank	2					2.000
	Total						**2.000**
						Total Quantity in 1 nos	**2.000**
19.024	OD21963/2022-2023						
	Supply of GPS fitted vacuum truck of capacity 3000 litres for septage management including de-sludging equipment and cleaning devices						
	Supply of GPS fitted vacuum truck of capacity 3000 litres for septage management including de-sludging						
	Supply of GPS fitted vacuum truck of capacity 3000 litres for septage management including de-sludging	2					2.000
	Total						**2.000**
						Total Quantity in 1 nos	**2.000**
19.025	OD21964/2022-2023						
	Piping, bypass arrangements, steel ladder, framework and fire fighting arrangements						
	Piping, bypass arrangements, steel ladder, framework and fire fighting arrangements						
		1					1.000
	Total						**1.000**
						Total Quantity in 1 nos	**1.000**
20	ELECTRICAL AND INSTRUMENTATION WORKS						
20.001	OD21903/2022-2023						
	Interconnecting piping system: • All process piping is to be in uPVC of approved ISI make, Class 2 minimum • All process valves to be in PP/PVC of Ball / Globe type• For valves in piping of ID > 150 mm, Butterfly valves are preferred • NRV should be provided at the common discharge header of all process pumps • Dosing lines to be in flexible Teflon / rigid PVC / HDPE. Detailed hydraulic analysis must be done for the system before supply and installation.						
	Interconnecting piping system:						

Sl No	Specification	No	Length	Width	Depth	Cf	Quantity
	Interconnecting piping system:	1					1.000
	Total						**1.000**
						Total Quantity in 1 nos	**1.000**
20.002	OD21904/2022-2023						
	ELECTRICAL & INSTRUMENTATION-Instrumentation items consisting of pressure guages, level switches, electro magnetic flow meter, normal flow meter , pressure gauges, IoT based sensors, electrical panels – Powder coated MCC Panel shall be Non compartmentalized free standing floor mounted, dust and vermin proof, with reinforcement of suitable size angle iron, channel, T -iron flats as required. Panel shall be suitable for 415V, 3-Phase,50 Hz incomer. Switchgear components to include, but not limited to, MCCB for incomer and for each switchgear, suitable OLR and contactor provisions to be given as per guidelines of the Electrical authority. Panel to be fabricated based on the Motor Load List as given in the technical specifications AC: MS powder coated panel with switchgear components as per motor load list, fixed, floor mounted and non compartmentalized pane.INTERCONNECTING CABLING – Outgoing feeders from AC panel to each prime mover will be based on CEIG guidelines. Cables to be suitably protected either through (a) PVC conduit or (b) armored cables as appropriate Cabling includes glanding and termination for each prime mover. Cables should not be run on the ground or directly on the walls. Cables to be mounted on suitable runners / cable trays / PVC conduits as appropriate. All interconnecting cabling and glanding , termination accessories as per specifications.						
	ELECTRICAL & INSTRUMENTATION						
	ELECTRICAL & INSTRUMENTATION	1					1.000
	Total						**1.000**
						Total Quantity in 1 nos	**1.000**
20.003	OD21905/2022-2023						
	Supply, installation and commissioning of diesel generator						
	Supply, installation and commissioning of diesel generator						
	Supply, installation and commissioning of diesel generator	7					7.000
	Total						**7.000**
						Total Quantity in 1 nos	**7.000**
20.004	OD21906/2022-2023						
	Supply and installation of accessories for electrical connection and control units for lifting stations and collection wells including foundations						
	Supply and installation of accessories for electrical connection and control units for lifting stations						
	Lifting stations	66					66.000

Sl No	Specification	No	Length	Width	Depth	Cf	Quantity
	Total						**66.000**
						Total Quantity in 1 nos	**66.000**
20.005	OD21907/2022-2023						
	Supply and installation of accessories for electrical connection and control units for lifting stations and collection wells including foundations						
	Supply and installation of accessories for electrical connection and control units for lifting stations						
	Collection wells	3					3.000
	Total						**3.000**
						Total Quantity in 1 nos	**3.000**
20.006	OD21908/2022-2023						
	Supply, installation and commissioning of solar units for lifting stations and collection wells						
	Supply, installation and commissioning of solar units for lifting stations and collection wells						
	Supply, installation and commissioning of solar units for lifting stations and collection wells	69					69.000
	Total						**69.000**
						Total Quantity in 1 nos	**69.000**
20.007	OD21909/2022-2023						
	Supply, installation and commissioning of solar units for STP						
	Supply, installation and commissioning of solar units for STP						
	Supply, installation and commissioning of solar units for STP	1					1.000
	Total						**1.000**
						Total Quantity in 1 nos	**1.000**

DRAFT
PRICE
e-PLATFORM FOR THE MANAGEMENT OF PUBLIC WORKS

ABSTRACT ESTIMATE

Others-Sewerage scheme to Pattambi Municipality-Sewerage network-Sewerage Work

Sl No	Specification	Quantity	Rate	Amount
1	**1.Civil components - OIL AND GREEASE TRAP**			
1.001	2.6.1			
	Earth work in excavation by mechanical means (Hydraulic excavator)/manual means over areas (exceeding 30 cm in depth, 1.5 m in width as well as 10 sqm on plan) including disposal of excavated earth, lead up to 50 m and lift up to 1.5 m, disposed earth to be levelled and neatly dressed.All kinds of soil			
	Net Total	30.730cum	@212.70/cum	6536.27
1.002	4.1.6			
	Providing and laying in position cement concrete of specified grade excluding the cost of centering and shuttering - All work up to plinth level:1:3:6 (1 cement : 3 coarse sand : 6 graded stone aggregate 40 mm nominal size)			
	Net Total	4.907cum	@7166.46/cum	35165.82
1.003	OD21898/2022-2023			
	(Item 5.37.1+5.34.1) Providing and laying in position ready mixed M-25 grade concrete for reinforced cement concrete work, using cement content as per approved design mix, manufactured in fully automatic batching plant and transported to site of work in transit mixer for all leads, having continuous agitated mixer, manufactured as per mix design of specified grade for reinforced cement concrete work including pumping of R.M.C. from transit mixer to site of laying, excluding the cost of centering, shuttering finishing and reinforcement including cost of admixtures in recommended proportions as per IS: 9103 to accelerate/ retard setting of concrete, improve workability without impairing strength and durability as per direction of the Engineer - in -charge. Note:- Cement content considered in this item is @330 kg/cum. Excess /less cement used as per design mix is payable/recoverable separately. All wiork upto plinth level Extra for providing richer mixes at all floor levels. Note:- Excess/less cement over the specified cement content used is payable/ recoverable separately. Providing M-30 grade concrete instead of M-25 grade BMC/RMC. (Note:- Cement content considered in M-30 is @ 340 kg/cum). 			
	Net Total	33.130cum	@9906.33/cum	328196.71
1.004	5.37.1			
	Providing and laying in position ready mixed M-25 grade concrete for reinforced cement concrete work, using cement content as per approved design mix, manufactured in fully automatic batching plant and transported to site of work in transit mixer for all leads, having continuous agitated mixer, manufactured as per mix design of specified grade for reinforced cement concrete work including pumping of R.M.C. from transit mixer to site of laying, excluding the cost of centering, shuttering finishing and reinforcement including cost of admixtures in recommended proportions as per IS: 9103 to accelerate/ retard setting of concrete, improve workability without impairing strength and durability as per direction of the Engineer - in -charge. Note:- Cement content considered in this item is @330 kg/cum. Excess /less cement used as per design mix is payable/recoverable separately.All wiork upto			

Sl No	Specification	Quantity	Rate	Amount
	plinth level			
	Net Total	4.005cum	@9824.76/cum	39348.16
1.005	5.22.6			
	Steel reinforcement for R.C.C work including straightening, cutting, bending, placing in position and binding all complete upto plinth levelThermo - Mechanically Treated bars of grade Fe-500D or more			
	Net Total	4376.220kilogram	@97.69/kilogram	427512.93
1.006	4.12			
	Extra for providing and mixing water proofing material in cement concrete work in doses by weight of cement as per manufacturer's specification .			
	Net Total	12586.190kg	@1.33/kg	16739.63
1.007	5.9.1			
	Centering and shuttering including strutting, etc. and removal of form for:Foundations, footings, bases of columns, etc for mass concrete			
	Net Total	13.125sqm	@333.24/sqm	4373.78
1.008	5.9.2			
	Centering and shuttering including strutting, etc. and removal of form for:Walls (any thickness) including attached pilasters, butteresses, plinth and string courses etc.			
	Net Total	139.220sqm	@712.76/sqm	99230.45
1.009	5.9.3			
	Centering and shuttering including strutting, etc. and removal of form for:Suspended floors, roofs, landings, balconies and access platform			
	Net Total	26.633sqm	@810.70/sqm	21591.37
1.010	22.23.1			
	Providing and applying integral crystalline slurry of hydrophilic in nature for waterproofing treatment to the RCC structures like retaining walls of the basement, water tanks, roof slabs, podiums, reservior, sewage & water treatment plant, tunnels / subway and bridge deck etc., prepared by mixing in the ratio of 5 : 2 (5 parts integral crystalline slurry : 2 parts water) for vertical surfaces and 3 : 1 (3 parts integral crystalline slurry : 1 part water) for horizontal surfaces and applying the same from negative (internal) side with the help of synthetic fiber brush. The material shall meet the requirements as specified in ACI-212-3R-2010 i.e by reducing permeability of concrete by more than 90% compared with control concrete as per DIN 1048 and resistant to 16 bar hydrostatic pressure on negative side. The crystalline slurry shall be capable of self-healing of cracks up to a width of 0.50mm. The work shall be carried out all complete as per specification and the direction of the engineerin- charge. The product performance shall carry guarantee for 10 years against any leakage.For vertical surface two coats @0.70 kg per sqm			
	Net Total	64.160sqm	@566.73/sqm	36361.40
1.011	22.23.2			

Sl No	Specification	Quantity	Rate	Amount
	Providing and applying integral crystalline slurry of hydrophilic in nature for waterproofing treatment to the RCC structures like retaining walls of the basement, water tanks, roof slabs, podiums, reservior, sewage & water treatment plant, tunnels / subway and bridge deck etc., prepared by mixing in the ratio of 5 : 2 (5 parts integral crystalline slurry : 2 parts water) for vertical surfaces and 3 : 1 (3 parts integral crystalline slurry : 1 part water) for horizontal surfaces and applying the same from negative (internal) side with the help of synthetic fiber brush. The material shall meet the requirements as specified in ACI-212-3R-2010 i.e by reducing permeability of concrete by more than 90% compared with control concrete as per DIN 1048 and resistant to 16 bar hydrostatic pressure on negative side. The crystalline slurry shall be capable of self-healing of cracks up to a width of 0.50mm. The work shall be carried out all complete as per specification and the direction of the engineerin- charge. The product performance shall carry guarantee for 10 years against any leakage.For horizontal surface one coat @1.10 kg per sqm.			
	Net Total	20.200sqm	@436.82/sqm	8823.76
1.012	13.7.1			
	12 mm cement plaster finished with a floating coat of neat cement of mix:1:3 (1 cement : 3 fine sand)			
	Net Total	104.020sqm	@398.74/sqm	41476.93
1.013	19.18.1			
	Supplying and fixing C.I with out frame for manholes:455 x 610 mm rectangular C.I cover (light duty) the weight of the cover to be no less than 23 kg			
	Net Total	2.000each	@1551.44/each	3102.88
	Heading Total(Rs)			1068460.09
2	**CIVIL COMPONENTS- RECEIVING CHAMBER**			
2.001	2.6.1			
	Earth work in excavation by mechanical means (Hydraulic excavator)/manual means over areas (exceeding 30 cm in depth, 1.5 m in width as well as 10 sqm on plan) including disposal of excavated earth, lead up to 50 m and lift up to 1.5 m, disposed earth to be levelled and neatly dressed.All kinds of soil			
	Net Total	73.914cum	@212.70/cum	15721.51
2.002	4.1.6			
	Providing and laying in position cement concrete of specified grade excluding the cost of centering and shuttering - All work up to plinth level:1:3:6 (1 cement : 3 coarse sand : 6 graded stone aggregate 40 mm nominal size)			
	Net Total	4.478cum	@7166.46/cum	32091.41
2.003	OD21967/2022-2023			
	(Item 5.37.1+5.34.1) Providing and laying in position ready mixed M-25 grade concrete for reinforced cement concrete work, using cement content as per approved design mix, manufactured in fully automatic batching plant and transported to site of work in transit mixer for all leads, having continuous agitated mixer, manufactured as per mix design of specified grade for reinforced cement concrete work including pumping of R.M.C. from transit mixer to site of laying, excluding the cost of			

Sl No	Specification	Quantity	Rate	Amount
	centering, shuttering finishing and reinforcement including cost of admixtures in recommended proportions as per IS: 9103 to accelerate/ retard setting of concrete, improve workability without impairing strength and durability as per direction of the Engineer - in -charge. Note:- Cement content considered in this item is @330 kg/cum. Excess /less cement used as per design mix is payable/recoverable separately. All wiork upto plinth level Extra for providing richer mixes at all floor levels. Note:- Excess/less cement over the specified cement content used is payable/ recoverable separately. Providing M-30 grade concrete instead of M-25 grade BMC/RMC. (Note:- Cement content considered in M-30 is @ 340 kg/cum). 			
	Net Total	22.733cum	@9906.32/cum	225200.37
2.004	5.37.1			
	Providing and laying in position ready mixed M-25 grade concrete for reinforced cement concrete work, using cement content as per approved design mix, manufactured in fully automatic batching plant and transported to site of work in transit mixer for all leads, having continuous agitated mixer, manufactured as per mix design of specified grade for reinforced cement concrete work including pumping of R.M.C. from transit mixer to site of laying, excluding the cost of centering, shuttering finishing and reinforcement including cost of admixtures in recommended proportions as per IS: 9103 to accelerate/ retard setting of concrete, improve workability without impairing strength and durability as per direction of the Engineer - in -charge. Note:- Cement content considered in this item is @330 kg/cum. Excess /less cement used as per design mix is payable/recoverable separately.All wiork upto plinth level			
	Net Total	2.881cum	@9824.76/cum	28305.13
2.005	5.22.6			
	Steel reinforcement for R.C.C work including straightening, cutting, bending, placing in position and binding all complete upto plinth levelThermo - Mechanically Treated bars of grade Fe-500D or more			
	Net Total	3016.800kilogram	@97.69/kilogram	294711.19
2.006	4.12			
	Extra for providing and mixing water proofing material in cement concrete work in doses by weight of cement as per manufacturer's specification .			
	Net Total	8682.000kg	@1.33/kg	11547.06
2.007	5.9.1			
	Centering and shuttering including strutting, etc. and removal of form for:Foundations, footings, bases of columns, etc for mass concrete			
	Net Total	7.410sqm	@333.24/sqm	2469.31
2.008	5.9.2			
	Centering and shuttering including strutting, etc. and removal of form for:Walls (any thickness) including attached pilasters, butteresses, plinth and string courses etc.			
	Net Total	91.900sqm	@712.76/sqm	65502.64
2.009	5.9.3			
	Centering and shuttering including strutting, etc. and removal of form for:Suspended			

Sl No	Specification	Quantity	Rate	Amount
	floors, roofs, landings, balconies and access platform			
	Net Total	17.295sqm	@810.70/sqm	14021.06
2.010	2.25			
	Filling available excavated earth (excluding rock) in trenches, plinth, sides of foundation etc. in layers not exceeding 20 cm in depth, consolidating each deposited layer by ramming and watering, lead up to 50 m and lift up to 1.5 m.			
	Net Total	43.730cum	@256.95/cum	11236.42
2.011	22.23.1			
	Providing and applying integral crystalline slurry of hydrophilic in nature for waterproofing treatment to the RCC structures like retaining walls of the basement, water tanks, roof slabs, podiums, reservior, sewage & water treatment plant, tunnels / subway and bridge deck etc., prepared by mixing in the ratio of 5 : 2 (5 parts integral crystalline slurry : 2 parts water) for vertical surfaces and 3 : 1 (3 parts integral crystalline slurry : 1 part water) for horizontal surfaces and applying the same from negative (internal) side with the help of synthetic fiber brush. The material shall meet the requirements as specified in ACI-212-3R-2010 i.e by reducing permeability of concrete by more than 90% compared with control concrete as per DIN 1048 and resistant to 16 bar hydrostatic pressure on negative side. The crystalline slurry shall be capable of self-healing of cracks up to a width of 0.50mm. The work shall be carried out all complete as per specification and the direction of the engineerin-charge. The product performance shall carry guarantee for 10 years against any leakage.For vertical surface two coats @0.70 kg per sqm			
	Net Total	42.105sqm	@566.73/sqm	23862.17
2.012	22.23.2			
	Providing and applying integral crystalline slurry of hydrophilic in nature for waterproofing treatment to the RCC structures like retaining walls of the basement, water tanks, roof slabs, podiums, reservior, sewage & water treatment plant, tunnels / subway and bridge deck etc., prepared by mixing in the ratio of 5 : 2 (5 parts integral crystalline slurry : 2 parts water) for vertical surfaces and 3 : 1 (3 parts integral crystalline slurry : 1 part water) for horizontal surfaces and applying the same from negative (internal) side with the help of synthetic fiber brush. The material shall meet the requirements as specified in ACI-212-3R-2010 i.e by reducing permeability of concrete by more than 90% compared with control concrete as per DIN 1048 and resistant to 16 bar hydrostatic pressure on negative side. The crystalline slurry shall be capable of self-healing of cracks up to a width of 0.50mm. The work shall be carried out all complete as per specification and the direction of the engineerin-charge. The product performance shall carry guarantee for 10 years against any leakage.For horizontal surface one coat @1.10 kg per sqm.			
	Net Total	14.190sqm	@436.82/sqm	6198.48
2.013	13.7.1			
	12 mm cement plaster finished with a floating coat of neat cement of mix:1:3 (1 cement : 3 fine sand)			
	Net Total	72.660sqm	@398.74/sqm	28972.45

Sl No	Specification	Quantity	Rate	Amount
2.014	19.18.1			
	Supplying and fixing C.I with out frame for manholes:455 x 610 mm rectangular C.I cover (light duty) the weight of the cover to be no less than 23 kg			
	Net Total	2.000each	@1551.44/each	3102.88
2.015	OD21968/2022-2023			
	Providing and fixing uPVC pipes & fittings includings jointing of pipes with one step uPVC solvent cement , testing of joints complete as per direction of Engineer in Charge. 110mm dia 6Kgf/cm²- for vent pipe			
	Net Total	0.450metre	@1230.01/metre	553.50
			Heading Total(Rs)	763495.58
3	**CIVIL COMPONENTS - GRIT SEPARATOR AND SCREEN CHANNEL**			
3.001	2.6.1			
	Earth work in excavation by mechanical means (Hydraulic excavator)/manual means over areas (exceeding 30 cm in depth, 1.5 m in width as well as 10 sqm on plan) including disposal of excavated earth, lead up to 50 m and lift up to 1.5 m, disposed earth to be levelled and neatly dressed.All kinds of soil			
	Net Total	86.475cum	@212.70/cum	18393.23
3.002	4.1.6			
	Providing and laying in position cement concrete of specified grade excluding the cost of centering and shuttering - All work up to plinth level:1:3:6 (1 cement : 3 coarse sand : 6 graded stone aggregate 40 mm nominal size)			
	Net Total	25.883cum	@7166.46/cum	185489.48
3.003	OD21899/2022-2023			
	(Item 5.37.1+5.34.1) Providing and laying in position ready mixed M-25 grade concrete for reinforced cement concrete work, using cement content as per approved design mix, manufactured in fully automatic batching plant and transported to site of work in transit mixer for all leads, having continuous agitated mixer, manufactured as per mix design of specified grade for reinforced cement concrete work including pumping of R.M.C. from transit mixer to site of laying, excluding the cost of centering, shuttering finishing and reinforcement including cost of admixtures in recommended proportions as per IS: 9103 to accelerate/ retard setting of concrete, improve workability without impairing strength and durability as per direction of the Engineer - in -charge. Note:- Cement content considered in this item is @330 kg/cum. Excess /less cement used as per design mix is payable/recoverable separately. All wiork upto plinth level Extra for providing richer mixes at all floor levels. Note:- Excess/less cement over the specified cement content used is payable/ recoverable separately. Providing M-30 grade concrete instead of M-25 grade BMC/RMC. (Note:- Cement content considered in M-30 is @ 340 kg/cum). 			
	Net Total	84.291cum	@9906.33/cum	835014.46
3.004	5.22.6			
	Steel reinforcement for R.C.C work including straightening, cutting, bending, placing in position and binding all complete upto plinth levelThermo - Mechanically Treated bars of grade Fe-500D or more			

Sl No	Specification	Quantity	Rate	Amount
	Net Total	10116.000kilogram	@97.69/kilogram	988232.04
3.005	4.12			
	Extra for providing and mixing water proofing material in cement concrete work in doses by weight of cement as per manufacturer's specification .			
	Net Total	28662.000kg	@1.33/kg	38120.46
3.006	5.9.1			
	Centering and shuttering including strutting, etc. and removal of form for:Foundations, footings, bases of columns, etc for mass concrete			
	Net Total	24.600sqm	@333.24/sqm	8197.70
3.007	5.9.2			
	Centering and shuttering including strutting, etc. and removal of form for:Walls (any thickness) including attached pilasters, butteresses, plinth and string courses etc.			
	Net Total	232.160sqm	@712.76/sqm	165474.36
3.008	5.9.3			
	Centering and shuttering including strutting, etc. and removal of form for:Suspended floors, roofs, landings, balconies and access platform			
	Net Total	74.810sqm	@810.70/sqm	60648.47
3.009	22.23.1			
	Providing and applying integral crystalline slurry of hydrophilic in nature for waterproofing treatment to the RCC structures like retaining walls of the basement, water tanks, roof slabs, podiums, reservior, sewage & water treatment plant, tunnels / subway and bridge deck etc., prepared by mixing in the ratio of 5 : 2 (5 parts integral crystalline slurry : 2 parts water) for vertical surfaces and 3 : 1 (3 parts integral crystalline slurry : 1 part water) for horizontal surfaces and applying the same from negative (internal) side with the help of synthetic fiber brush. The material shall meet the requirements as specified in ACI-212-3R-2010 i.e by reducing permeability of concrete by more than 90% compared with control concrete as per DIN 1048 and resistant to 16 bar hydrostatic pressure on negative side. The crystalline slurry shall be capable of self-healing of cracks up to a width of 0.50mm. The work shall be carried out all complete as per specification and the direction of the engineerin- charge. The product performance shall carry guarantee for 10 years against any leakage.For vertical surface two coats @0.70 kg per sqm			
	Net Total	112.360sqm	@566.73/sqm	63677.78
3.010	22.23.2			
	Providing and applying integral crystalline slurry of hydrophilic in nature for waterproofing treatment to the RCC structures like retaining walls of the basement, water tanks, roof slabs, podiums, reservior, sewage & water treatment plant, tunnels / subway and bridge deck etc., prepared by mixing in the ratio of 5 : 2 (5 parts integral crystalline slurry : 2 parts water) for vertical surfaces and 3 : 1 (3 parts integral crystalline slurry : 1 part water) for horizontal surfaces and applying the same from negative (internal) side with the help of synthetic fiber brush. The material shall meet the requirements as specified in ACI-212-3R-2010 i.e by reducing			

Sl No	Specification	Quantity	Rate	Amount
	permeability of concrete by more than 90% compared with control concrete as per DIN 1048 and resistant to 16 bar hydrostatic pressure on negative side. The crystalline slurry shall be capable of self-healing of cracks up to a width of 0.50mm. The work shall be carried out all complete as per specification and the direction of the engineerin- charge. The product performance shall carry guarantee for 10 years against any leakage.For horizontal surface one coat @1.10 kg per sqm.			
	Net Total	63.110sqm	@436.82/sqm	27567.71
3.011	13.7.1			
	12 mm cement plaster finished with a floating coat of neat cement of mix:1:3 (1 cement : 3 fine sand)			
	Net Total	238.040sqm	@398.74/sqm	94916.07
3.012	19.18.1			
	Supplying and fixing C.I with out frame for manholes:455 x 610 mm rectangular C.I cover (light duty) the weight of the cover to be no less than 23 kg			
	Net Total	3.000each	@1551.44/each	4654.32
			Heading Total(Rs)	2490386.08
4	**CIVIL COMPONENTS - PRIMARY CLARIFIER AND EQUALISATION TANK**			
4.001	2.6.1			
	Earth work in excavation by mechanical means (Hydraulic excavator)/manual means over areas (exceeding 30 cm in depth, 1.5 m in width as well as 10 sqm on plan) including disposal of excavated earth, lead up to 50 m and lift up to 1.5 m, disposed earth to be levelled and neatly dressed.All kinds of soil			
	Net Total	876.653cum	@212.70/cum	186464.09
4.002	4.1.6			
	Providing and laying in position cement concrete of specified grade excluding the cost of centering and shuttering - All work up to plinth level:1:3:6 (1 cement : 3 coarse sand : 6 graded stone aggregate 40 mm nominal size)			
	Net Total	128.678cum	@7166.46/cum	922165.74
4.003	OD21900/2022-2023			
	(Item 5.37.1+5.34.1) Providing and laying in position ready mixed M-25 grade concrete for reinforced cement concrete work, using cement content as per approved design mix, manufactured in fully automatic batching plant and transported to site of work in transit mixer for all leads, having continuous agitated mixer, manufactured as per mix design of specified grade for reinforced cement concrete work including pumping of R.M.C. from transit mixer to site of laying, excluding the cost of centering, shuttering finishing and reinforcement including cost of admixtures in recommended proportions as per IS: 9103 to accelerate/ retard setting of concrete, improve workability without impairing strength and durability as per direction of the Engineer - in -charge. Note:- Cement content considered in this item is @330 kg/cum. Excess /less cement used as per design mix is payable/recoverable separately. All wiork upto plinth level Extra for providing richer mixes at all floor levels. Note:- Excess/less cement over the specified			

Sl No	Specification	Quantity	Rate	Amount
	cement content used is payable/ recoverable separately. Providing M-30 grade concrete instead of M-25 grade BMC/RMC. (Note:- Cement content considered in M-30 is @ 340 kg/cum). 			
	Net Total	461.398cum	@9906.32/cum	4570756.24
4.004	5.22.6			
	Steel reinforcement for R.C.C work including straightening, cutting, bending, placing in position and binding all complete upto plinth levelThermo - Mechanically Treated bars of grade Fe-500D or more			
	Net Total	55138.800kilogram	@97.69/kilogram	5386509.37
4.005	4.12			
	Extra for providing and mixing water proofing material in cement concrete work in doses by weight of cement as per manufacturer's specification .			
	Net Total	156226.600kg	@1.33/kg	207781.38
4.006	5.9.1			
	Centering and shuttering including strutting, etc. and removal of form for:Foundations, footings, bases of columns, etc for mass concrete			
	Net Total	39.658sqm	@333.24/sqm	13215.63
4.007	5.9.2			
	Centering and shuttering including strutting, etc. and removal of form for:Walls (any thickness) including attached pilasters, butteresses, plinth and string courses etc.			
	Net Total	648.960sqm	@712.76/sqm	462552.73
4.008	5.9.3			
	Centering and shuttering including strutting, etc. and removal of form for:Suspended floors, roofs, landings, balconies and access platform			
	Net Total	396.330sqm	@810.70/sqm	321304.73
4.009	22.23.1			
	Providing and applying integral crystalline slurry of hydrophilic in nature for waterproofing treatment to the RCC structures like retaining walls of the basement, water tanks, roof slabs, podiums, reservior, sewage & water treatment plant, tunnels / subway and bridge deck etc., prepared by mixing in the ratio of 5 : 2 (5 parts integral crystalline slurry : 2 parts water) for vertical surfaces and 3 : 1 (3 parts integral crystalline slurry : 1 part water) for horizontal surfaces and applying the same from negative (internal) side with the help of synthetic fiber brush. The material shall meet the requirements as specified in ACI-212-3R-2010 i.e by reducing permeability of concrete by more than 90% compared with control concrete as per DIN 1048 and resistant to 16 bar hydrostatic pressure on negative side. The crystalline slurry shall be capable of self-healing of cracks up to a width of 0.50mm. The work shall be carried out all complete as per specification and the direction of the engineerin- charge. The product performance shall carry guarantee for 10 years against any leakage.For vertical surface two coats @0.70 kg per sqm			
	Net Total	460.629sqm	@566.73/sqm	261052.27

Sl No	Specification	Quantity	Rate	Amount
4.010	22.23.2			
	Providing and applying integral crystalline slurry of hydrophilic in nature for waterproofing treatment to the RCC structures like retaining walls of the basement, water tanks, roof slabs, podiums, reservior, sewage & water treatment plant, tunnels / subway and bridge deck etc., prepared by mixing in the ratio of 5 : 2 (5 parts integral crystalline slurry : 2 parts water) for vertical surfaces and 3 : 1 (3 parts integral crystalline slurry : 1 part water) for horizontal surfaces and applying the same from negative (internal) side with the help of synthetic fiber brush. The material shall meet the requirements as specified in ACI-212-3R-2010 i.e by reducing permeability of concrete by more than 90% compared with control concrete as per DIN 1048 and resistant to 16 bar hydrostatic pressure on negative side. The crystalline slurry shall be capable of self-healing of cracks up to a width of 0.50mm. The work shall be carried out all complete as per specification and the direction of the engineerin- charge. The product performance shall carry guarantee for 10 years against any leakage.For horizontal surface one coat @1.10 kg per sqm.			
	Net Total	513.438sqm	@436.82/sqm	224279.99
4.011	13.7.1			
	12 mm cement plaster finished with a floating coat of neat cement of mix:1:3 (1 cement : 3 fine sand)			
	Net Total	1240.359sqm	@398.74/sqm	494580.75
4.012	19.18.1			
	Supplying and fixing C.I with out frame for manholes:455 x 610 mm rectangular C.I cover (light duty) the weight of the cover to be no less than 23 kg			
	Net Total	1.000each	@1551.44/each	1551.44
4.013	OD21901/2022-2023			
	Providing and fixing uPVC pipes & fittings includings jointing of pipes with one step uPVC solvent cement , testing of joints complete as per direction of Engineer in Charge. 110mm dia 6Kgf/cm²- for vent pipe			
	Net Total	0.450metre	@1230.01/metre	553.50
			Heading Total(Rs)	13052767.86
5	**CIVIL COMPONENTS - DILUTION TANK FOR CO-TRATMENT - RECTANGULAR**			
5.001	2.6.1			
	Earth work in excavation by mechanical means (Hydraulic excavator)/manual means over areas (exceeding 30 cm in depth, 1.5 m in width as well as 10 sqm on plan) including disposal of excavated earth, lead up to 50 m and lift up to 1.5 m, disposed earth to be levelled and neatly dressed.All kinds of soil			
	Net Total	17.496cum	@212.70/cum	3721.40
5.002	4.1.6			
	Providing and laying in position cement concrete of specified grade excluding the cost of centering and shuttering - All work up to plinth level:1:3:6 (1 cement : 3			

Sl No	Specification	Quantity	Rate	Amount
	coarse sand : 6 graded stone aggregate 40 mm nominal size)			
	Net Total	4.374cum	@7166.46/cum	31346.10
5.003	OD21919/2022-2023			
	(Item 5.37.1+5.34.1) Providing and laying in position ready mixed M-25 grade concrete for reinforced cement concrete work, using cement content as per approved design mix, manufactured in fully automatic batching plant and transported to site of work in transit mixer for all leads, having continuous agitated mixer, manufactured as per mix design of specified grade for reinforced cement concrete work including pumping of R.M.C. from transit mixer to site of laying, excluding the cost of centering, shuttering finishing and reinforcement including cost of admixtures in recommended proportions as per IS: 9103 to accelerate/ retard setting of concrete, improve workability without impairing strength and durability as per direction of the Engineer - in -charge. Note:- Cement content considered in this item is @330 kg/cum. Excess /less cement used as per design mix is payable/recoverable separately. All wiork upto plinth level Extra for providing richer mixes at all floor levels. Note:- Excess/less cement over the specified cement content used is payable/ recoverable separately. Providing M-30 grade concrete instead of M-25 grade BMC/RMC. (Note:- Cement content considered in M-30 is @ 340 kg/cum). 			
	Net Total	28.490cum	@9906.32/cum	282231.06
5.004	5.22.6			
	Steel reinforcement for R.C.C work including straightening, cutting, bending, placing in position and binding all complete upto plinth levelThermo - Mechanically Treated bars of grade Fe-500D or more			
	Net Total	3420.000kilogram	@97.69/kilogram	334099.80
5.005	4.12			
	Extra for providing and mixing water proofing material in cement concrete work in doses by weight of cement as per manufacturer's specification .			
	Net Total	9690.000kg	@1.33/kg	12887.70
5.006	5.9.1			
	Centering and shuttering including strutting, etc. and removal of form for:Foundations, footings, bases of columns, etc for mass concrete			
	Net Total	8.640sqm	@333.24/sqm	2879.19
5.007	5.9.2			
	Centering and shuttering including strutting, etc. and removal of form for:Walls (any thickness) including attached pilasters, butteresses, plinth and string courses etc.			
	Net Total	104.520sqm	@712.76/sqm	74497.68
5.008	5.9.3			
	Centering and shuttering including strutting, etc. and removal of form for:Suspended floors, roofs, landings, balconies and access platform			
	Net Total	14.220sqm	@810.70/sqm	11528.15
5.009	22.23.1			

Sl No	Specification	Quantity	Rate	Amount
	Providing and applying integral crystalline slurry of hydrophilic in nature for waterproofing treatment to the RCC structures like retaining walls of the basement, water tanks, roof slabs, podiums, reservior, sewage & water treatment plant, tunnels / subway and bridge deck etc., prepared by mixing in the ratio of 5 : 2 (5 parts integral crystalline slurry : 2 parts water) for vertical surfaces and 3 : 1 (3 parts integral crystalline slurry : 1 part water) for horizontal surfaces and applying the same from negative (internal) side with the help of synthetic fiber brush. The material shall meet the requirements as specified in ACI-212-3R-2010 i.e by reducing permeability of concrete by more than 90% compared with control concrete as per DIN 1048 and resistant to 16 bar hydrostatic pressure on negative side. The crystalline slurry shall be capable of self-healing of cracks up to a width of 0.50mm. The work shall be carried out all complete as per specification and the direction of the engineerin- charge. The product performance shall carry guarantee for 10 years against any leakage.For vertical surface two coats @0.70 kg per sqm			
	Net Total	48.240sqm	@566.73/sqm	27339.06
5.010	22.23.2			
	Providing and applying integral crystalline slurry of hydrophilic in nature for waterproofing treatment to the RCC structures like retaining walls of the basement, water tanks, roof slabs, podiums, reservior, sewage & water treatment plant, tunnels / subway and bridge deck etc., prepared by mixing in the ratio of 5 : 2 (5 parts integral crystalline slurry : 2 parts water) for vertical surfaces and 3 : 1 (3 parts integral crystalline slurry : 1 part water) for horizontal surfaces and applying the same from negative (internal) side with the help of synthetic fiber brush. The material shall meet the requirements as specified in ACI-212-3R-2010 i.e by reducing permeability of concrete by more than 90% compared with control concrete as per DIN 1048 and resistant to 16 bar hydrostatic pressure on negative side. The crystalline slurry shall be capable of self-healing of cracks up to a width of 0.50mm. The work shall be carried out all complete as per specification and the direction of the engineerin- charge. The product performance shall carry guarantee for 10 years against any leakage.For horizontal surface one coat @1.10 kg per sqm.			
	Net Total	12.960sqm	@436.82/sqm	5661.19
5.011	13.7.1			
	12 mm cement plaster finished with a floating coat of neat cement of mix:1:3 (1 cement : 3 fine sand)			
	Net Total	73.890sqm	@398.74/sqm	29462.90
5.012	19.18.1			
	Supplying and fixing C.I with out frame for manholes:455 x 610 mm rectangular C.I cover (light duty) the weight of the cover to be no less than 23 kg			
	Net Total	1.000each	@1551.44/each	1551.44
5.013	OD21920/2022-2023			
	Providing and fixing uPVC pipes & fittings includings jointing of pipes with one step uPVC solvent cement , testing of joints complete as per direction of Engineer in Charge. 110mm dia 6Kgf/cm²- for vent pipe			

Sl No	Specification	Quantity	Rate	Amount
	Net Total	0.450metre	@1230.01/metre	553.50
			Heading Total(Rs)	817759.17
6	**CIVIL COMPONENTS - MBBR TANK FOR BOD REMOVAL**			
6.001	2.6.1			
	Earth work in excavation by mechanical means (Hydraulic excavator)/manual means over areas (exceeding 30 cm in depth, 1.5 m in width as well as 10 sqm on plan) including disposal of excavated earth, lead up to 50 m and lift up to 1.5 m, disposed earth to be levelled and neatly dressed.All kinds of soil			
	Net Total	486.000cum	@212.70/cum	103372.20
6.002	OD21902/2022-2023			
	(Item 5.37.1+5.34.1) Providing and laying in position ready mixed M-25 grade concrete for reinforced cement concrete work, using cement content as per approved design mix, manufactured in fully automatic batching plant and transported to site of work in transit mixer for all leads, having continuous agitated mixer, manufactured as per mix design of specified grade for reinforced cement concrete work including pumping of R.M.C. from transit mixer to site of laying, excluding the cost of centering, shuttering finishing and reinforcement including cost of admixtures in recommended proportions as per IS: 9103 to accelerate/ retard setting of concrete, improve workability without impairing strength and durability as per direction of the Engineer - in -charge. Note:- Cement content considered in this item is @330 kg/cum. Excess /less cement used as per design mix is payable/recoverable separately. All wiork upto plinth level Extra for providing richer mixes at all floor levels. Note:- Excess/less cement over the specified cement content used is payable/ recoverable separately. Providing M-30 grade concrete instead of M-25 grade BMC/RMC. (Note:- Cement content considered in M-30 is @ 340 kg/cum). 			
	Net Total	198.024cum	@9906.32/cum	1961689.11
6.003	5.22.6			
	Steel reinforcement for R.C.C work including straightening, cutting, bending, placing in position and binding all complete upto plinth levelThermo - Mechanically Treated bars of grade Fe-500D or more			
	Net Total	23762.400kilogram	@97.69/kilogram	2321348.86
6.004	4.12			
	Extra for providing and mixing water proofing material in cement concrete work in doses by weight of cement as per manufacturer's specification .			
	Net Total	67326.800kg	@1.33/kg	89544.64
6.005	5.9.1			
	Centering and shuttering including strutting, etc. and removal of form for:Foundations, footings, bases of columns, etc for mass concrete			
	Net Total	24.500sqm	@333.24/sqm	8164.38
6.006	5.9.2			
	Centering and shuttering including strutting, etc. and removal of form for:Walls (any thickness) including attached pilasters, butteresses, plinth and string courses etc.			

Sl No	Specification	Quantity	Rate	Amount
	Net Total	564.160sqm	@712.76/sqm	402110.68
6.007	22.23.1			
	Providing and applying integral crystalline slurry of hydrophilic in nature for waterproofing treatment to the RCC structures like retaining walls of the basement, water tanks, roof slabs, podiums, reservior, sewage & water treatment plant, tunnels / subway and bridge deck etc., prepared by mixing in the ratio of 5 : 2 (5 parts integral crystalline slurry : 2 parts water) for vertical surfaces and 3 : 1 (3 parts integral crystalline slurry : 1 part water) for horizontal surfaces and applying the same from negative (internal) side with the help of synthetic fiber brush. The material shall meet the requirements as specified in ACI-212-3R-2010 i.e by reducing permeability of concrete by more than 90% compared with control concrete as per DIN 1048 and resistant to 16 bar hydrostatic pressure on negative side. The crystalline slurry shall be capable of self-healing of cracks up to a width of 0.50mm. The work shall be carried out all complete as per specification and the direction of the engineerin- charge. The product performance shall carry guarantee for 10 years against any leakage.For vertical surface two coats @0.70 kg per sqm			
	Net Total	277.160sqm	@566.73/sqm	157074.89
6.008	22.23.2			
	Providing and applying integral crystalline slurry of hydrophilic in nature for waterproofing treatment to the RCC structures like retaining walls of the basement, water tanks, roof slabs, podiums, reservior, sewage & water treatment plant, tunnels / subway and bridge deck etc., prepared by mixing in the ratio of 5 : 2 (5 parts integral crystalline slurry : 2 parts water) for vertical surfaces and 3 : 1 (3 parts integral crystalline slurry : 1 part water) for horizontal surfaces and applying the same from negative (internal) side with the help of synthetic fiber brush. The material shall meet the requirements as specified in ACI-212-3R-2010 i.e by reducing permeability of concrete by more than 90% compared with control concrete as per DIN 1048 and resistant to 16 bar hydrostatic pressure on negative side. The crystalline slurry shall be capable of self-healing of cracks up to a width of 0.50mm. The work shall be carried out all complete as per specification and the direction of the engineerin- charge. The product performance shall carry guarantee for 10 years against any leakage.For horizontal surface one coat @1.10 kg per sqm.			
	Net Total	285.610sqm	@436.82/sqm	124760.16
6.009	13.7.1			
	12 mm cement plaster finished with a floating coat of neat cement of mix:1:3 (1 cement : 3 fine sand)			
	Net Total	562.770sqm	@398.74/sqm	224398.91
	Heading Total(Rs)			5392463.83
7	**CIVIL COMPONENTS - MBBR TANK FOR NITRIFICATION**			
7.001	2.6.1			
	Earth work in excavation by mechanical means (Hydraulic excavator)/manual means over areas (exceeding 30 cm in depth, 1.5 m in width as well as 10 sqm on plan) including disposal of excavated earth, lead up to 50 m and lift up to 1.5 m, disposed			

Sl No	Specification	Quantity	Rate	Amount
	earth to be levelled and neatly dressed.All kinds of soil			
	Net Total	444.925cum	@212.70/cum	94635.55
7.002	4.1.6			
	Providing and laying in position cement concrete of specified grade excluding the cost of centering and shuttering - All work up to plinth level:1:3:6 (1 cement : 3 coarse sand : 6 graded stone aggregate 40 mm nominal size)			
	Net Total	51.338cum	@7166.46/cum	367911.72
7.003	OD21916/2022-2023			
	(Item 5.37.1+5.34.1) Providing and laying in position ready mixed M-25 grade concrete for reinforced cement concrete work, using cement content as per approved design mix, manufactured in fully automatic batching plant and transported to site of work in transit mixer for all leads, having continuous agitated mixer, manufactured as per mix design of specified grade for reinforced cement concrete work including pumping of R.M.C. from transit mixer to site of laying, excluding the cost of centering, shuttering finishing and reinforcement including cost of admixtures in recommended proportions as per IS: 9103 to accelerate/ retard setting of concrete, improve workability without impairing strength and durability as per direction of the Engineer - in -charge. Note:- Cement content considered in this item is @330 kg/cum. Excess /less cement used as per design mix is payable/recoverable separately. All wiork upto plinth level Extra for providing richer mixes at all floor levels. Note:- Excess/less cement over the specified cement content used is payable/ recoverable separately. Providing M-30 grade concrete instead of M-25 grade BMC/RMC. (Note:- Cement content considered in M-30 is @ 340 kg/cum). 			
	Net Total	205.396cum	@9906.33/cum	2034720.56
7.004	5.22.6			
	Steel reinforcement for R.C.C work including straightening, cutting, bending, placing in position and binding all complete upto plinth levelThermo - Mechanically Treated bars of grade Fe-500D or more			
	Net Total	24648.000kilogram	@97.69/kilogram	2407863.12
7.005	4.12			
	Extra for providing and mixing water proofing material in cement concrete work in doses by weight of cement as per manufacturer's specification .			
	Net Total	69836.000kg	@1.33/kg	92881.88
7.006	5.9.1			
	Centering and shuttering including strutting, etc. and removal of form for:Foundations, footings, bases of columns, etc for mass concrete			
	Net Total	25.900sqm	@333.24/sqm	8630.92
7.007	5.9.2			
	Centering and shuttering including strutting, etc. and removal of form for:Walls (any thickness) including attached pilasters, butteresses, plinth and string courses etc.			
	Net Total	580.560sqm	@712.76/sqm	413799.95
7.008	22.23.1			

Sl No	Specification	Quantity	Rate	Amount
	Providing and applying integral crystalline slurry of hydrophilic in nature for waterproofing treatment to the RCC structures like retaining walls of the basement, water tanks, roof slabs, podiums, reservior, sewage & water treatment plant, tunnels / subway and bridge deck etc., prepared by mixing in the ratio of 5 : 2 (5 parts integral crystalline slurry : 2 parts water) for vertical surfaces and 3 : 1 (3 parts integral crystalline slurry : 1 part water) for horizontal surfaces and applying the same from negative (internal) side with the help of synthetic fiber brush. The material shall meet the requirements as specified in ACI-212-3R-2010 i.e by reducing permeability of concrete by more than 90% compared with control concrete as per DIN 1048 and resistant to 16 bar hydrostatic pressure on negative side. The crystalline slurry shall be capable of self-healing of cracks up to a width of 0.50mm. The work shall be carried out all complete as per specification and the direction of the engineerin- charge. The product performance shall carry guarantee for 10 years against any leakage.For vertical surface two coats @0.70 kg per sqm			
	Net Total	285.360sqm	@566.73/sqm	161722.07
7.009	22.23.2			
	Providing and applying integral crystalline slurry of hydrophilic in nature for waterproofing treatment to the RCC structures like retaining walls of the basement, water tanks, roof slabs, podiums, reservior, sewage & water treatment plant, tunnels / subway and bridge deck etc., prepared by mixing in the ratio of 5 : 2 (5 parts integral crystalline slurry : 2 parts water) for vertical surfaces and 3 : 1 (3 parts integral crystalline slurry : 1 part water) for horizontal surfaces and applying the same from negative (internal) side with the help of synthetic fiber brush. The material shall meet the requirements as specified in ACI-212-3R-2010 i.e by reducing permeability of concrete by more than 90% compared with control concrete as per DIN 1048 and resistant to 16 bar hydrostatic pressure on negative side. The crystalline slurry shall be capable of self-healing of cracks up to a width of 0.50mm. The work shall be carried out all complete as per specification and the direction of the engineerin- charge. The product performance shall carry guarantee for 10 years against any leakage.For horizontal surface one coat @1.10 kg per sqm.			
	Net Total	302.760sqm	@436.82/sqm	132251.62
7.010	13.7.1			
	12 mm cement plaster finished with a floating coat of neat cement of mix:1:3 (1 cement : 3 fine sand)			
	Net Total	588.120sqm	@398.74/sqm	234506.97
			Heading Total(Rs)	5948924.36
8	**CIVIL COMPONENTS - MBBR TANK FOR POST ANOXIC DE-NITRIFIACTION**			
8.001	2.6.1			
	Earth work in excavation by mechanical means (Hydraulic excavator)/manual means over areas (exceeding 30 cm in depth, 1.5 m in width as well as 10 sqm on plan) including disposal of excavated earth, lead up to 50 m and lift up to 1.5 m, disposed earth to be levelled and neatly dressed.All kinds of soil			

Sl No	Specification	Quantity	Rate	Amount
	Net Total	269.568cum	@212.70/cum	57337.11
8.002	4.1.6			
	Providing and laying in position cement concrete of specified grade excluding the cost of centering and shuttering - All work up to plinth level:1:3:6 (1 cement : 3 coarse sand : 6 graded stone aggregate 40 mm nominal size)			
	Net Total	31.104cum	@7166.46/cum	222905.57
8.003	OD21918/2022-2023			
	(Item 5.37.1+5.34.1) Providing and laying in position ready mixed M-25 grade concrete for reinforced cement concrete work, using cement content as per approved design mix, manufactured in fully automatic batching plant and transported to site of work in transit mixer for all leads, having continuous agitated mixer, manufactured as per mix design of specified grade for reinforced cement concrete work including pumping of R.M.C. from transit mixer to site of laying, excluding the cost of centering, shuttering finishing and reinforcement including cost of admixtures in recommended proportions as per IS: 9103 to accelerate/ retard setting of concrete, improve workability without impairing strength and durability as per direction of the Engineer - in -charge. Note:- Cement content considered in this item is @330 kg/cum. Excess /less cement used as per design mix is payable/recoverable separately. All wiork upto plinth level Extra for providing richer mixes at all floor levels. Note:- Excess/less cement over the specified cement content used is payable/ recoverable separately. Providing M-30 grade concrete instead of M-25 grade BMC/RMC. (Note:- Cement content considered in M-30 is @ 340 kg/cum). 			
	Net Total	160.496cum	@9906.33/cum	1589926.34
8.004	5.22.6			
	Steel reinforcement for R.C.C work including straightening, cutting, bending, placing in position and binding all complete upto plinth levelThermo - Mechanically Treated bars of grade Fe-500D or more			
	Net Total	19260.000kilogram	@97.69/kilogram	1881509.40
8.005	4.12			
	Extra for providing and mixing water proofing material in cement concrete work in doses by weight of cement as per manufacturer's specification .			
	Net Total	54570.000kg	@1.33/kg	72578.10
8.006	5.9.1			
	Centering and shuttering including strutting, etc. and removal of form for:Foundations, footings, bases of columns, etc for mass concrete			
	Net Total	15.960sqm	@333.24/sqm	5318.51
8.007	5.9.2			
	Centering and shuttering including strutting, etc. and removal of form for:Walls (any thickness) including attached pilasters, butteresses, plinth and string courses etc.			
	Net Total	423.870sqm	@712.76/sqm	302117.58
8.008	22.23.1			
	Providing and applying integral crystalline slurry of hydrophilic in nature for			

Sl No	Specification	Quantity	Rate	Amount
	waterproofing treatment to the RCC structures like retaining walls of the basement, water tanks, roof slabs, podiums, reservior, sewage & water treatment plant, tunnels / subway and bridge deck etc., prepared by mixing in the ratio of 5 : 2 (5 parts integral crystalline slurry : 2 parts water) for vertical surfaces and 3 : 1 (3 parts integral crystalline slurry : 1 part water) for horizontal surfaces and applying the same from negative (internal) side with the help of synthetic fiber brush. The material shall meet the requirements as specified in ACI-212-3R-2010 i.e by reducing permeability of concrete by more than 90% compared with control concrete as per DIN 1048 and resistant to 16 bar hydrostatic pressure on negative side. The crystalline slurry shall be capable of self-healing of cracks up to a width of 0.50mm. The work shall be carried out all complete as per specification and the direction of the engineerin- charge. The product performance shall carry guarantee for 10 years against any leakage.For vertical surface two coats @0.70 kg per sqm			
	Net Total	418.950sqm	@566.73/sqm	237431.53
8.009	22.23.2			
	Providing and applying integral crystalline slurry of hydrophilic in nature for waterproofing treatment to the RCC structures like retaining walls of the basement, water tanks, roof slabs, podiums, reservior, sewage & water treatment plant, tunnels / subway and bridge deck etc., prepared by mixing in the ratio of 5 : 2 (5 parts integral crystalline slurry : 2 parts water) for vertical surfaces and 3 : 1 (3 parts integral crystalline slurry : 1 part water) for horizontal surfaces and applying the same from negative (internal) side with the help of synthetic fiber brush. The material shall meet the requirements as specified in ACI-212-3R-2010 i.e by reducing permeability of concrete by more than 90% compared with control concrete as per DIN 1048 and resistant to 16 bar hydrostatic pressure on negative side. The crystalline slurry shall be capable of self-healing of cracks up to a width of 0.50mm. The work shall be carried out all complete as per specification and the direction of the engineerin- charge. The product performance shall carry guarantee for 10 years against any leakage.For horizontal surface one coat @1.10 kg per sqm.			
	Net Total	176.890sqm	@436.82/sqm	77269.09
8.010	13.7.1			
	12 mm cement plaster finished with a floating coat of neat cement of mix:1:3 (1 cement : 3 fine sand)			
	Net Total	395.010sqm	@398.74/sqm	157506.29
			Heading Total(Rs)	4603899.52
9	**CIVIL COMPONENTS -MBBR TANK FOR CHAMBER AFTER DE-NITRIFICATION**			
9.001	2.6.1			
	Earth work in excavation by mechanical means (Hydraulic excavator)/manual means over areas (exceeding 30 cm in depth, 1.5 m in width as well as 10 sqm on plan) including disposal of excavated earth, lead up to 50 m and lift up to 1.5 m, disposed earth to be levelled and neatly dressed.All kinds of soil			
	Net Total	74.529cum	@212.70/cum	15852.32

Sl No	Specification	Quantity	Rate	Amount
9.002	4.1.6			
	Providing and laying in position cement concrete of specified grade excluding the cost of centering and shuttering - All work up to plinth level:1:3:6 (1 cement : 3 coarse sand : 6 graded stone aggregate 40 mm nominal size)			
	Net Total	12.422cum	@7166.46/cum	89021.77
9.003	OD21917/2022-2023			
	(Item 5.37.1+5.34.1) Providing and laying in position ready mixed M-25 grade concrete for reinforced cement concrete work, using cement content as per approved design mix, manufactured in fully automatic batching plant and transported to site of work in transit mixer for all leads, having continuous agitated mixer, manufactured as per mix design of specified grade for reinforced cement concrete work including pumping of R.M.C. from transit mixer to site of laying, excluding the cost of centering, shuttering finishing and reinforcement including cost of admixtures in recommended proportions as per IS: 9103 to accelerate/ retard setting of concrete, improve workability without impairing strength and durability as per direction of the Engineer - in -charge. Note:- Cement content considered in this item is @330 kg/cum. Excess /less cement used as per design mix is payable/recoverable separately. All wiork upto plinth level Extra for providing richer mixes at all floor levels. Note:- Excess/less cement over the specified cement content used is payable/ recoverable separately. Providing M-30 grade concrete instead of M-25 grade BMC/RMC. (Note:- Cement content considered in M-30 is @ 340 kg/cum). 			
	Net Total	69.820cum	@9906.33/cum	691659.96
9.004	5.22.6			
	Steel reinforcement for R.C.C work including straightening, cutting, bending, placing in position and binding all complete upto plinth levelThermo - Mechanically Treated bars of grade Fe-500D or more			
	Net Total	8378.400kilogram	@97.69/kilogram	818485.90
9.005	4.12			
	Extra for providing and mixing water proofing material in cement concrete work in doses by weight of cement as per manufacturer's specification .			
	Net Total	23738.800kg	@1.33/kg	31572.60
9.006	5.9.1			
	Centering and shuttering including strutting, etc. and removal of form for:Foundations, footings, bases of columns, etc for mass concrete			
	Net Total	16.380sqm	@333.24/sqm	5458.47
9.007	5.9.2			
	Centering and shuttering including strutting, etc. and removal of form for:Walls (any thickness) including attached pilasters, butteresses, plinth and string courses etc.			
	Net Total	272.240sqm	@712.76/sqm	194041.78
9.008	22.23.1			
	Providing and applying integral crystalline slurry of hydrophilic in nature for waterproofing treatment to the RCC structures like retaining walls of the basement,			

Sl No	Specification	Quantity	Rate	Amount
	water tanks, roof slabs, podiums, reservior, sewage & water treatment plant, tunnels / subway and bridge deck etc., prepared by mixing in the ratio of 5 : 2 (5 parts integral crystalline slurry : 2 parts water) for vertical surfaces and 3 : 1 (3 parts integral crystalline slurry : 1 part water) for horizontal surfaces and applying the same from negative (internal) side with the help of synthetic fiber brush. The material shall meet the requirements as specified in ACI-212-3R-2010 i.e by reducing permeability of concrete by more than 90% compared with control concrete as per DIN 1048 and resistant to 16 bar hydrostatic pressure on negative side. The crystalline slurry shall be capable of self-healing of cracks up to a width of 0.50mm. The work shall be carried out all complete as per specification and the direction of the engineerin- charge. The product performance shall carry guarantee for 10 years against any leakage.For vertical surface two coats @0.70 kg per sqm			
	Net Total	131.200sqm	@566.73/sqm	74354.98
9.009	22.23.2			
	Providing and applying integral crystalline slurry of hydrophilic in nature for waterproofing treatment to the RCC structures like retaining walls of the basement, water tanks, roof slabs, podiums, reservior, sewage & water treatment plant, tunnels / subway and bridge deck etc., prepared by mixing in the ratio of 5 : 2 (5 parts integral crystalline slurry : 2 parts water) for vertical surfaces and 3 : 1 (3 parts integral crystalline slurry : 1 part water) for horizontal surfaces and applying the same from negative (internal) side with the help of synthetic fiber brush. The material shall meet the requirements as specified in ACI-212-3R-2010 i.e by reducing permeability of concrete by more than 90% compared with control concrete as per DIN 1048 and resistant to 16 bar hydrostatic pressure on negative side. The crystalline slurry shall be capable of self-healing of cracks up to a width of 0.50mm. The work shall be carried out all complete as per specification and the direction of the engineerin- charge. The product performance shall carry guarantee for 10 years against any leakage.For horizontal surface one coat @1.10 kg per sqm.			
	Net Total	64.000sqm	@436.82/sqm	27956.48
9.010	13.7.1			
	12 mm cement plaster finished with a floating coat of neat cement of mix:1:3 (1 cement : 3 fine sand)			
	Net Total	195.200sqm	@398.74/sqm	77834.05
			Heading Total(Rs)	2026238.31
10	**CIVIL COMPONENTS - SECONDARY CLARIFIER WITH PLATE SETTLER**			
10.001	2.6.1			
	Earth work in excavation by mechanical means (Hydraulic excavator)/manual means over areas (exceeding 30 cm in depth, 1.5 m in width as well as 10 sqm on plan) including disposal of excavated earth, lead up to 50 m and lift up to 1.5 m, disposed earth to be levelled and neatly dressed.All kinds of soil			
	Net Total	349.920cum	@212.70/cum	74427.98
10.002	OD21914/2022-2023			

Sl No	Specification	Quantity	Rate	Amount
	(Item 5.37.1+5.34.1) Providing and laying in position ready mixed M-25 grade concrete for reinforced cement concrete work, using cement content as per approved design mix, manufactured in fully automatic batching plant and transported to site of work in transit mixer for all leads, having continuous agitated mixer, manufactured as per mix design of specified grade for reinforced cement concrete work including pumping of R.M.C. from transit mixer to site of laying, excluding the cost of centering, shuttering finishing and reinforcement including cost of admixtures in recommended proportions as per IS: 9103 to accelerate/ retard setting of concrete, improve workability without impairing strength and durability as per direction of the Engineer - in -charge. Note:- Cement content considered in this item is @330 kg/cum. Excess /less cement used as per design mix is payable/recoverable separately. All wiork upto plinth level Extra for providing richer mixes at all floor levels. Note:- Excess/less cement over the specified cement content used is payable/ recoverable separately. Providing M-30 grade concrete instead of M-25 grade BMC/RMC. (Note:- Cement content considered in M-30 is @ 340 kg/cum). 			
	Net Total	14.148cum	@9906.33/cum	140154.76
10.003	OD21915/2022-2023			
	od20804/2022_2023 :(5.37.2+5.34.1) Providing and laying in position ready mixed M-25 grade concrete for reinforced cement concrete work, using cement content as per approved design mix, manufactured in fully automatic batching plant and transported to site of work in transit mixer for all leads, having continuous agitated mixer, manufactured as per mix design of specified grade for reinforced cement concrete work including pumping of R.M.C. from transit mixer to site of laying, excluding the cost of centering, shuttering finishing and reinforcement including cost of admixtures in recommended proportions as per IS: 9103 to accelerate/ retard setting of concrete, improve workability without impairing strength and durability as per direction of the Engineer - in -charge. Note:- Cement content considered in this item is @330 kg/cum. Excess /less cement used as per design mix is payable/recoverable separately. All work above plinth level upto floor V level Extra for providing richer mixes at all floor levels. Note:- Excess/less cement over the specified cement content used is payable/ recoverable separately. Providing M-30 grade concrete instead of M-25 grade BMC/RMC. (Note:- Cement content considered in M-30 is @ 340 kg/cum). 			
	Net Total	97.403cum	@9108.12/cum	887158.21
10.004	5.22.6			
	Steel reinforcement for R.C.C work including straightening, cutting, bending, placing in position and binding all complete upto plinth levelThermo - Mechanically Treated bars of grade Fe-500D or more			
	Net Total	13388.160kilogram	@97.69/kilogram	1307889.35
10.005	4.12			
	Extra for providing and mixing water proofing material in cement concrete work in doses by weight of cement as per manufacturer's specification .			
	Net Total	37933.120kg	@1.33/kg	50451.05
10.006	5.9.1			
	Centering and shuttering including strutting, etc. and removal of form			

Sl No	Specification	Quantity	Rate	Amount
	for:Foundations, footings, bases of columns, etc for mass concrete			
	Net Total	120.300sqm	@333.24/sqm	40088.77
10.007	22.23.1			
	Providing and applying integral crystalline slurry of hydrophilic in nature for waterproofing treatment to the RCC structures like retaining walls of the basement, water tanks, roof slabs, podiums, reservior, sewage & water treatment plant, tunnels / subway and bridge deck etc., prepared by mixing in the ratio of 5 : 2 (5 parts integral crystalline slurry : 2 parts water) for vertical surfaces and 3 : 1 (3 parts integral crystalline slurry : 1 part water) for horizontal surfaces and applying the same from negative (internal) side with the help of synthetic fiber brush. The material shall meet the requirements as specified in ACI-212-3R-2010 i.e by reducing permeability of concrete by more than 90% compared with control concrete as per DIN 1048 and resistant to 16 bar hydrostatic pressure on negative side. The crystalline slurry shall be capable of self-healing of cracks up to a width of 0.50mm. The work shall be carried out all complete as per specification and the direction of the engineerin- charge. The product performance shall carry guarantee for 10 years against any leakage.For vertical surface two coats @0.70 kg per sqm			
	Net Total	289.350sqm	@566.73/sqm	163983.33
10.008	22.23.2			
	Providing and applying integral crystalline slurry of hydrophilic in nature for waterproofing treatment to the RCC structures like retaining walls of the basement, water tanks, roof slabs, podiums, reservior, sewage & water treatment plant, tunnels / subway and bridge deck etc., prepared by mixing in the ratio of 5 : 2 (5 parts integral crystalline slurry : 2 parts water) for vertical surfaces and 3 : 1 (3 parts integral crystalline slurry : 1 part water) for horizontal surfaces and applying the same from negative (internal) side with the help of synthetic fiber brush. The material shall meet the requirements as specified in ACI-212-3R-2010 i.e by reducing permeability of concrete by more than 90% compared with control concrete as per DIN 1048 and resistant to 16 bar hydrostatic pressure on negative side. The crystalline slurry shall be capable of self-healing of cracks up to a width of 0.50mm. The work shall be carried out all complete as per specification and the direction of the engineerin- charge. The product performance shall carry guarantee for 10 years against any leakage.For horizontal surface one coat @1.10 kg per sqm.			
	Net Total	29.160sqm	@436.82/sqm	12737.67
10.009	13.7.1			
	12 mm cement plaster finished with a floating coat of neat cement of mix:1:3 (1 cement : 3 fine sand)			
	Net Total	405.990sqm	@398.74/sqm	161884.45
			Heading Total(Rs)	2838775.57
11	**CIVIL COMPONENTS - SLUDGE SUMP - CIRCULAR**			
11.001	2.6.1			
	Earth work in excavation by mechanical means (Hydraulic excavator)/manual means			

Sl No	Specification	Quantity	Rate	Amount
	over areas (exceeding 30 cm in depth, 1.5 m in width as well as 10 sqm on plan) including disposal of excavated earth, lead up to 50 m and lift up to 1.5 m, disposed earth to be levelled and neatly dressed.All kinds of soil			
	Net Total	53.265cum	@212.70/cum	11329.47
11.002	4.1.6			
	Providing and laying in position cement concrete of specified grade excluding the cost of centering and shuttering - All work up to plinth level:1:3:6 (1 cement : 3 coarse sand : 6 graded stone aggregate 40 mm nominal size)			
	Net Total	3.716cum	@7166.46/cum	26630.57
11.003	OD21965/2022-2023			
	(Item 5.37.1+5.34.1) Providing and laying in position ready mixed M-25 grade concrete for reinforced cement concrete work, using cement content as per approved design mix, manufactured in fully automatic batching plant and transported to site of work in transit mixer for all leads, having continuous agitated mixer, manufactured as per mix design of specified grade for reinforced cement concrete work including pumping of R.M.C. from transit mixer to site of laying, excluding the cost of centering, shuttering finishing and reinforcement including cost of admixtures in recommended proportions as per IS: 9103 to accelerate/ retard setting of concrete, improve workability without impairing strength and durability as per direction of the Engineer - in -charge. Note:- Cement content considered in this item is @330 kg/cum. Excess /less cement used as per design mix is payable/recoverable separately. All wiork upto plinth level Extra for providing richer mixes at all floor levels. Note:- Excess/less cement over the specified cement content used is payable/ recoverable separately. Providing M-30 grade concrete instead of M-25 grade BMC/RMC. (Note:- Cement content considered in M-30 is @ 340 kg/cum). 			
	Net Total	18.527cum	@9906.33/cum	183534.58
11.004	5.22.6			
	Steel reinforcement for R.C.C work including straightening, cutting, bending, placing in position and binding all complete upto plinth levelThermo - Mechanically Treated bars of grade Fe-500D or more			
	Net Total	2218.800kilogram	@97.69/kilogram	216754.57
11.005	4.12			
	Extra for providing and mixing water proofing material in cement concrete work in doses by weight of cement as per manufacturer's specification .			
	Net Total	6286.600kg	@1.33/kg	8361.18
11.006	5.9.1			
	Centering and shuttering including strutting, etc. and removal of form for:Foundations, footings, bases of columns, etc for mass concrete			
	Net Total	3.861sqm	@333.24/sqm	1286.64
11.007	5.9.2			
	Centering and shuttering including strutting, etc. and removal of form for:Walls (any thickness) including attached pilasters, butteresses, plinth and string courses etc.			

Sl No	Specification	Quantity	Rate	Amount
	Net Total	73.966sqm	@712.76/sqm	52720.01
11.008	22.23.1			
	Providing and applying integral crystalline slurry of hydrophilic in nature for waterproofing treatment to the RCC structures like retaining walls of the basement, water tanks, roof slabs, podiums, reservior, sewage & water treatment plant, tunnels / subway and bridge deck etc., prepared by mixing in the ratio of 5 : 2 (5 parts integral crystalline slurry : 2 parts water) for vertical surfaces and 3 : 1 (3 parts integral crystalline slurry : 1 part water) for horizontal surfaces and applying the same from negative (internal) side with the help of synthetic fiber brush. The material shall meet the requirements as specified in ACI-212-3R-2010 i.e by reducing permeability of concrete by more than 90% compared with control concrete as per DIN 1048 and resistant to 16 bar hydrostatic pressure on negative side. The crystalline slurry shall be capable of self-healing of cracks up to a width of 0.50mm. The work shall be carried out all complete as per specification and the direction of the engineerin- charge. The product performance shall carry guarantee for 10 years against any leakage.For vertical surface two coats @0.70 kg per sqm			
	Net Total	21.980sqm	@566.73/sqm	12456.73
11.009	22.23.2			
	Providing and applying integral crystalline slurry of hydrophilic in nature for waterproofing treatment to the RCC structures like retaining walls of the basement, water tanks, roof slabs, podiums, reservior, sewage & water treatment plant, tunnels / subway and bridge deck etc., prepared by mixing in the ratio of 5 : 2 (5 parts integral crystalline slurry : 2 parts water) for vertical surfaces and 3 : 1 (3 parts integral crystalline slurry : 1 part water) for horizontal surfaces and applying the same from negative (internal) side with the help of synthetic fiber brush. The material shall meet the requirements as specified in ACI-212-3R-2010 i.e by reducing permeability of concrete by more than 90% compared with control concrete as per DIN 1048 and resistant to 16 bar hydrostatic pressure on negative side. The crystalline slurry shall be capable of self-healing of cracks up to a width of 0.50mm. The work shall be carried out all complete as per specification and the direction of the engineerin- charge. The product performance shall carry guarantee for 10 years against any leakage.For horizontal surface one coat @1.10 kg per sqm.			
	Net Total	9.620sqm	@436.82/sqm	4202.21
11.010	13.7.1			
	12 mm cement plaster finished with a floating coat of neat cement of mix:1:3 (1 cement : 3 fine sand)			
	Net Total	31.600sqm	@398.74/sqm	12600.18
	Heading Total(Rs)			529876.14
12	**CIVIL COMPONENTS- SLUDGE THICKENER - CIRCULAR**			
12.001	2.6.1			
	Earth work in excavation by mechanical means (Hydraulic excavator)/manual means over areas (exceeding 30 cm in depth, 1.5 m in width as well as 10 sqm on plan) including disposal of excavated earth, lead up to 50 m and lift up to 1.5 m, disposed			

Sl No	Specification	Quantity	Rate	Amount
	earth to be levelled and neatly dressed.All kinds of soil			
	Net Total	168.223cum	@212.70/cum	35781.03
12.002	4.1.6			
	Providing and laying in position cement concrete of specified grade excluding the cost of centering and shuttering - All work up to plinth level:1:3:6 (1 cement : 3 coarse sand : 6 graded stone aggregate 40 mm nominal size)			
	Net Total	7.210cum	@7166.46/cum	51670.18
12.003	OD21966/2022-2023			
	(Item 5.37.1+5.34.1) Providing and laying in position ready mixed M-25 grade concrete for reinforced cement concrete work, using cement content as per approved design mix, manufactured in fully automatic batching plant and transported to site of work in transit mixer for all leads, having continuous agitated mixer, manufactured as per mix design of specified grade for reinforced cement concrete work including pumping of R.M.C. from transit mixer to site of laying, excluding the cost of centering, shuttering finishing and reinforcement including cost of admixtures in recommended proportions as per IS: 9103 to accelerate/ retard setting of concrete, improve workability without impairing strength and durability as per direction of the Engineer - in -charge. Note:- Cement content considered in this item is @330 kg/cum. Excess /less cement used as per design mix is payable/recoverable separately. All wiork upto plinth level Extra for providing richer mixes at all floor levels. Note:- Excess/less cement over the specified cement content used is payable/ recoverable separately. Providing M-30 grade concrete instead of M-25 grade BMC/RMC. (Note:- Cement content considered in M-30 is @ 340 kg/cum). 			
	Net Total	36.604cum	@9906.33/cum	362611.30
12.004	5.22.6			
	Steel reinforcement for R.C.C work including straightening, cutting, bending, placing in position and binding all complete upto plinth levelThermo - Mechanically Treated bars of grade Fe-500D or more			
	Net Total	4381.200kilogram	@97.69/kilogram	427999.43
12.005	4.12			
	Extra for providing and mixing water proofing material in cement concrete work in doses by weight of cement as per manufacturer's specification .			
	Net Total	12413.400kg	@1.33/kg	16509.82
12.006	5.9.1			
	Centering and shuttering including strutting, etc. and removal of form for:Foundations, footings, bases of columns, etc for mass concrete			
	Net Total	8.572sqm	@333.24/sqm	2856.53
12.007	5.9.2			
	Centering and shuttering including strutting, etc. and removal of form for:Walls (any thickness) including attached pilasters, butteresses, plinth and string courses etc.			
	Net Total	109.900sqm	@712.76/sqm	78332.32
12.008	22.23.1			

Sl No	Specification	Quantity	Rate	Amount
	Providing and applying integral crystalline slurry of hydrophilic in nature for waterproofing treatment to the RCC structures like retaining walls of the basement, water tanks, roof slabs, podiums, reservior, sewage & water treatment plant, tunnels / subway and bridge deck etc., prepared by mixing in the ratio of 5 : 2 (5 parts integral crystalline slurry : 2 parts water) for vertical surfaces and 3 : 1 (3 parts integral crystalline slurry : 1 part water) for horizontal surfaces and applying the same from negative (internal) side with the help of synthetic fiber brush. The material shall meet the requirements as specified in ACI-212-3R-2010 i.e by reducing permeability of concrete by more than 90% compared with control concrete as per DIN 1048 and resistant to 16 bar hydrostatic pressure on negative side. The crystalline slurry shall be capable of self-healing of cracks up to a width of 0.50mm. The work shall be carried out all complete as per specification and the direction of the engineerin- charge. The product performance shall carry guarantee for 10 years against any leakage.For vertical surface two coats @0.70 kg per sqm			
	Net Total	52.600sqm	@566.73/sqm	29810.00
12.009	22.23.2			
	Providing and applying integral crystalline slurry of hydrophilic in nature for waterproofing treatment to the RCC structures like retaining walls of the basement, water tanks, roof slabs, podiums, reservior, sewage & water treatment plant, tunnels / subway and bridge deck etc., prepared by mixing in the ratio of 5 : 2 (5 parts integral crystalline slurry : 2 parts water) for vertical surfaces and 3 : 1 (3 parts integral crystalline slurry : 1 part water) for horizontal surfaces and applying the same from negative (internal) side with the help of synthetic fiber brush. The material shall meet the requirements as specified in ACI-212-3R-2010 i.e by reducing permeability of concrete by more than 90% compared with control concrete as per DIN 1048 and resistant to 16 bar hydrostatic pressure on negative side. The crystalline slurry shall be capable of self-healing of cracks up to a width of 0.50mm. The work shall be carried out all complete as per specification and the direction of the engineerin- charge. The product performance shall carry guarantee for 10 years against any leakage.For horizontal surface one coat @1.10 kg per sqm.			
	Net Total	35.260sqm	@436.82/sqm	15402.27
12.010	13.7.1			
	12 mm cement plaster finished with a floating coat of neat cement of mix:1:3 (1 cement : 3 fine sand)			
	Net Total	87.860sqm	@398.74/sqm	35033.30
			Heading Total(Rs)	1056006.18
13	**CIVIL COMPONENTS - CHLORINE CONTACT TANK - RECTANGULAR**			
13.001	2.6.1			
	Earth work in excavation by mechanical means (Hydraulic excavator)/manual means over areas (exceeding 30 cm in depth, 1.5 m in width as well as 10 sqm on plan) including disposal of excavated earth, lead up to 50 m and lift up to 1.5 m, disposed earth to be levelled and neatly dressed.All kinds of soil			
	Net Total	147.920cum	@212.70/cum	31462.58

Sl No	Specification	Quantity	Rate	Amount
13.002	4.1.6			
	Providing and laying in position cement concrete of specified grade excluding the cost of centering and shuttering - All work up to plinth level:1:3:6 (1 cement : 3 coarse sand : 6 graded stone aggregate 40 mm nominal size)			
	Net Total	11.094cum	@7166.46/cum	79504.71
13.003	OD21913/2022-2023			
	(Item 5.37.1+5.34.1) Providing and laying in position ready mixed M-25 grade concrete for reinforced cement concrete work, using cement content as per approved design mix, manufactured in fully automatic batching plant and transported to site of work in transit mixer for all leads, having continuous agitated mixer, manufactured as per mix design of specified grade for reinforced cement concrete work including pumping of R.M.C. from transit mixer to site of laying, excluding the cost of centering, shuttering finishing and reinforcement including cost of admixtures in recommended proportions as per IS: 9103 to accelerate/ retard setting of concrete, improve workability without impairing strength and durability as per direction of the Engineer - in -charge. Note:- Cement content considered in this item is @330 kg/cum. Excess /less cement used as per design mix is payable/recoverable separately. All wiork upto plinth level Extra for providing richer mixes at all floor levels. Note:- Excess/less cement over the specified cement content used is payable/ recoverable separately. Providing M-30 grade concrete instead of M-25 grade BMC/RMC. (Note:- Cement content considered in M-30 is @ 340 kg/cum). 			
	Net Total	49.586cum	@9906.33/cum	491215.28
13.004	5.22.6			
	Steel reinforcement for R.C.C work including straightening, cutting, bending, placing in position and binding all complete upto plinth levelThermo - Mechanically Treated bars of grade Fe-500D or more			
	Net Total	5950.800kilogram	@97.69/kilogram	581333.65
13.005	4.12			
	Extra for providing and mixing water proofing material in cement concrete work in doses by weight of cement as per manufacturer's specification .			
	Net Total	16860.600kg	@1.33/kg	22424.60
13.006	5.9.1			
	Centering and shuttering including strutting, etc. and removal of form for:Foundations, footings, bases of columns, etc for mass concrete			
	Net Total	12.040sqm	@333.24/sqm	4012.21
13.007	5.9.2			
	Centering and shuttering including strutting, etc. and removal of form for:Walls (any thickness) including attached pilasters, butteresses, plinth and string courses etc.			
	Net Total	158.000sqm	@712.76/sqm	112616.08
13.008	22.23.1			
	Providing and applying integral crystalline slurry of hydrophilic in nature for waterproofing treatment to the RCC structures like retaining walls of the basement,			

Sl No	Specification	Quantity	Rate	Amount
	water tanks, roof slabs, podiums, reservior, sewage & water treatment plant, tunnels / subway and bridge deck etc., prepared by mixing in the ratio of 5 : 2 (5 parts integral crystalline slurry : 2 parts water) for vertical surfaces and 3 : 1 (3 parts integral crystalline slurry : 1 part water) for horizontal surfaces and applying the same from negative (internal) side with the help of synthetic fiber brush. The material shall meet the requirements as specified in ACI-212-3R-2010 i.e by reducing permeability of concrete by more than 90% compared with control concrete as per DIN 1048 and resistant to 16 bar hydrostatic pressure on negative side. The crystalline slurry shall be capable of self-healing of cracks up to a width of 0.50mm. The work shall be carried out all complete as per specification and the direction of the engineerin- charge. The product performance shall carry guarantee for 10 years against any leakage.For vertical surface two coats @0.70 kg per sqm			
	Net Total	76.000sqm	@566.73/sqm	43071.48
13.009	22.23.2			
	Providing and applying integral crystalline slurry of hydrophilic in nature for waterproofing treatment to the RCC structures like retaining walls of the basement, water tanks, roof slabs, podiums, reservior, sewage & water treatment plant, tunnels / subway and bridge deck etc., prepared by mixing in the ratio of 5 : 2 (5 parts integral crystalline slurry : 2 parts water) for vertical surfaces and 3 : 1 (3 parts integral crystalline slurry : 1 part water) for horizontal surfaces and applying the same from negative (internal) side with the help of synthetic fiber brush. The material shall meet the requirements as specified in ACI-212-3R-2010 i.e by reducing permeability of concrete by more than 90% compared with control concrete as per DIN 1048 and resistant to 16 bar hydrostatic pressure on negative side. The crystalline slurry shall be capable of self-healing of cracks up to a width of 0.50mm. The work shall be carried out all complete as per specification and the direction of the engineerin- charge. The product performance shall carry guarantee for 10 years against any leakage.For horizontal surface one coat @1.10 kg per sqm.			
	Net Total	57.760sqm	@436.82/sqm	25230.72
13.010	13.7.1			
	12 mm cement plaster finished with a floating coat of neat cement of mix:1:3 (1 cement : 3 fine sand)			
	Net Total	133.760sqm	@398.74/sqm	53335.46
			Heading Total(Rs)	1444206.77
14	**CIVIL COMPONENTS - FILTER FEED TANK - RECTANGULAR**			
14.001	2.6.1			
	Earth work in excavation by mechanical means (Hydraulic excavator)/manual means over areas (exceeding 30 cm in depth, 1.5 m in width as well as 10 sqm on plan) including disposal of excavated earth, lead up to 50 m and lift up to 1.5 m, disposed earth to be levelled and neatly dressed.All kinds of soil			
	Net Total	53.290cum	@212.70/cum	11334.78
14.002	4.1.6			

Sl No	Specification	Quantity	Rate	Amount
	Providing and laying in position cement concrete of specified grade excluding the cost of centering and shuttering - All work up to plinth level:1:3:6 (1 cement : 3 coarse sand : 6 graded stone aggregate 40 mm nominal size)			
	Net Total	7.994cum	@7166.46/cum	57288.68
14.003	OD21910/2022-2023			
	(Item 5.37.1+5.34.1) Providing and laying in position ready mixed M-25 grade concrete for reinforced cement concrete work, using cement content as per approved design mix, manufactured in fully automatic batching plant and transported to site of work in transit mixer for all leads, having continuous agitated mixer, manufactured as per mix design of specified grade for reinforced cement concrete work including pumping of R.M.C. from transit mixer to site of laying, excluding the cost of centering, shuttering finishing and reinforcement including cost of admixtures in recommended proportions as per IS: 9103 to accelerate/ retard setting of concrete, improve workability without impairing strength and durability as per direction of the Engineer - in -charge. Note:- Cement content considered in this item is @330 kg/cum. Excess /less cement used as per design mix is payable/recoverable separately. All wiork upto plinth level Extra for providing richer mixes at all floor levels. Note:- Excess/less cement over the specified cement content used is payable/ recoverable separately. Providing M-30 grade concrete instead of M-25 grade BMC/RMC. (Note:- Cement content considered in M-30 is @ 340 kg/cum). 			
	Net Total	31.145cum	@9906.33/cum	308532.65
14.004	5.22.6			
	Steel reinforcement for R.C.C work including straightening, cutting, bending, placing in position and binding all complete upto plinth levelThermo - Mechanically Treated bars of grade Fe-500D or more			
	Net Total	3736.800kilogram	@97.69/kilogram	365047.99
14.005	4.12			
	Extra for providing and mixing water proofing material in cement concrete work in doses by weight of cement as per manufacturer's specification .			
	Net Total	10587.600kg	@1.33/kg	14081.51
14.006	5.9.1			
	Centering and shuttering including strutting, etc. and removal of form for:Foundations, footings, bases of columns, etc for mass concrete			
	Net Total	8.760sqm	@333.24/sqm	2919.18
14.007	5.9.2			
	Centering and shuttering including strutting, etc. and removal of form for:Walls (any thickness) including attached pilasters, butteresses, plinth and string courses etc.			
	Net Total	121.260sqm	@712.76/sqm	86429.28
14.008	22.23.1			
	Providing and applying integral crystalline slurry of hydrophilic in nature for waterproofing treatment to the RCC structures like retaining walls of the basement, water tanks, roof slabs, podiums, reservior, sewage & water treatment plant, tunnels / subway and bridge deck etc., prepared by mixing in the ratio of 5 : 2 (5 parts			

Sl No	Specification	Quantity	Rate	Amount
	integral crystalline slurry : 2 parts water) for vertical surfaces and 3 : 1 (3 parts integral crystalline slurry : 1 part water) for horizontal surfaces and applying the same from negative (internal) side with the help of synthetic fiber brush. The material shall meet the requirements as specified in ACI-212-3R-2010 i.e by reducing permeability of concrete by more than 90% compared with control concrete as per DIN 1048 and resistant to 16 bar hydrostatic pressure on negative side. The crystalline slurry shall be capable of self-healing of cracks up to a width of 0.50mm. The work shall be carried out all complete as per specification and the direction of the engineerin- charge. The product performance shall carry guarantee for 10 years against any leakage.For vertical surface two coats @0.70 kg per sqm			
	Net Total	58.280sqm	@566.73/sqm	33029.02
14.009	22.23.2			
	Providing and applying integral crystalline slurry of hydrophilic in nature for waterproofing treatment to the RCC structures like retaining walls of the basement, water tanks, roof slabs, podiums, reservior, sewage & water treatment plant, tunnels / subway and bridge deck etc., prepared by mixing in the ratio of 5 : 2 (5 parts integral crystalline slurry : 2 parts water) for vertical surfaces and 3 : 1 (3 parts integral crystalline slurry : 1 part water) for horizontal surfaces and applying the same from negative (internal) side with the help of synthetic fiber brush. The material shall meet the requirements as specified in ACI-212-3R-2010 i.e by reducing permeability of concrete by more than 90% compared with control concrete as per DIN 1048 and resistant to 16 bar hydrostatic pressure on negative side. The crystalline slurry shall be capable of self-healing of cracks up to a width of 0.50mm. The work shall be carried out all complete as per specification and the direction of the engineerin- charge. The product performance shall carry guarantee for 10 years against any leakage.For horizontal surface one coat @1.10 kg per sqm.			
	Net Total	38.440sqm	@436.82/sqm	16791.36
14.010	13.7.1			
	12 mm cement plaster finished with a floating coat of neat cement of mix:1:3 (1 cement : 3 fine sand)			
	Net Total	96.720sqm	@398.74/sqm	38566.13
			Heading Total(Rs)	934020.58
15	**CIVIL COMPONENTS - TREATED WATER TANK - RECTANGULAR**			
15.001	2.6.1			
	Earth work in excavation by mechanical means (Hydraulic excavator)/manual means over areas (exceeding 30 cm in depth, 1.5 m in width as well as 10 sqm on plan) including disposal of excavated earth, lead up to 50 m and lift up to 1.5 m, disposed earth to be levelled and neatly dressed.All kinds of soil			
	Net Total	340.704cum	@212.70/cum	72467.74
15.002	4.1.6			
	Providing and laying in position cement concrete of specified grade excluding the cost of centering and shuttering - All work up to plinth level:1:3:6 (1 cement : 3			

Sl No	Specification	Quantity	Rate	Amount
	coarse sand : 6 graded stone aggregate 40 mm nominal size)			
	Net Total	16.224cum	@7166.46/cum	116268.65
15.003	OD21912/2022-2023			
	(Item 5.37.1+5.34.1) Providing and laying in position ready mixed M-25 grade concrete for reinforced cement concrete work, using cement content as per approved design mix, manufactured in fully automatic batching plant and transported to site of work in transit mixer for all leads, having continuous agitated mixer, manufactured as per mix design of specified grade for reinforced cement concrete work including pumping of R.M.C. from transit mixer to site of laying, excluding the cost of centering, shuttering finishing and reinforcement including cost of admixtures in recommended proportions as per IS: 9103 to accelerate/ retard setting of concrete, improve workability without impairing strength and durability as per direction of the Engineer - in -charge. Note:- Cement content considered in this item is @330 kg/cum. Excess /less cement used as per design mix is payable/recoverable separately. All wiork upto plinth level Extra for providing richer mixes at all floor levels. Note:- Excess/less cement over the specified cement content used is payable/ recoverable separately. Providing M-30 grade concrete instead of M-25 grade BMC/RMC. (Note:- Cement content considered in M-30 is @ 340 kg/cum). 			
	Net Total	61.698cum	@9906.33/cum	611200.75
15.004	5.22.6			
	Steel reinforcement for R.C.C work including straightening, cutting, bending, placing in position and binding all complete upto plinth levelThermo - Mechanically Treated bars of grade Fe-500D or more			
	Net Total	7404.000kilogram	@97.69/kilogram	723296.76
15.005	4.12			
	Extra for providing and mixing water proofing material in cement concrete work in doses by weight of cement as per manufacturer's specification .			
	Net Total	20978.000kg	@1.33/kg	27900.74
15.006	5.9.1			
	Centering and shuttering including strutting, etc. and removal of form for:Foundations, footings, bases of columns, etc for mass concrete			
	Net Total	12.480sqm	@333.24/sqm	4158.84
15.007	5.9.2			
	Centering and shuttering including strutting, etc. and removal of form for:Walls (any thickness) including attached pilasters, butteresses, plinth and string courses etc.			
	Net Total	234.000sqm	@712.76/sqm	166785.84
15.008	22.23.1			
	Providing and applying integral crystalline slurry of hydrophilic in nature for waterproofing treatment to the RCC structures like retaining walls of the basement, water tanks, roof slabs, podiums, reservior, sewage & water treatment plant, tunnels / subway and bridge deck etc., prepared by mixing in the ratio of 5 : 2 (5 parts integral crystalline slurry : 2 parts water) for vertical surfaces and 3 : 1 (3 parts integral crystalline slurry : 1 part water) for horizontal surfaces and applying the			

Sl No	Specification	Quantity	Rate	Amount
	same from negative (internal) side with the help of synthetic fiber brush. The material shall meet the requirements as specified in ACI-212-3R-2010 i.e by reducing permeability of concrete by more than 90% compared with control concrete as per DIN 1048 and resistant to 16 bar hydrostatic pressure on negative side. The crystalline slurry shall be capable of self-healing of cracks up to a width of 0.50mm. The work shall be carried out all complete as per specification and the direction of the engineerin- charge. The product performance shall carry guarantee for 10 years against any leakage.For vertical surface two coats @0.70 kg per sqm			
	Net Total	114.000sqm	@566.73/sqm	64607.22
15.009	22.23.2			
	Providing and applying integral crystalline slurry of hydrophilic in nature for waterproofing treatment to the RCC structures like retaining walls of the basement, water tanks, roof slabs, podiums, reservior, sewage & water treatment plant, tunnels / subway and bridge deck etc., prepared by mixing in the ratio of 5 : 2 (5 parts integral crystalline slurry : 2 parts water) for vertical surfaces and 3 : 1 (3 parts integral crystalline slurry : 1 part water) for horizontal surfaces and applying the same from negative (internal) side with the help of synthetic fiber brush. The material shall meet the requirements as specified in ACI-212-3R-2010 i.e by reducing permeability of concrete by more than 90% compared with control concrete as per DIN 1048 and resistant to 16 bar hydrostatic pressure on negative side. The crystalline slurry shall be capable of self-healing of cracks up to a width of 0.50mm. The work shall be carried out all complete as per specification and the direction of the engineerin- charge. The product performance shall carry guarantee for 10 years against any leakage.For horizontal surface one coat @1.10 kg per sqm.			
	Net Total	90.250sqm	@436.82/sqm	39423.01
15.010	13.7.1			
	12 mm cement plaster finished with a floating coat of neat cement of mix:1:3 (1 cement : 3 fine sand)			
	Net Total	204.250sqm	@398.74/sqm	81442.65
			Heading Total(Rs)	1907552.20
16	**PILE FOUNDATIONS**			
16.001	20.2.3			
	Boring, providing and installing bored cast-in-situ reinforced cement concrete piles of grade M-25 of specified diameter and length below the pile cap to carry a safe working load not less than specified, excluding the cost of steel reinforcement but including the cost of boring, with bentonite solution and temporary casing of appropriate length for setting out and removal of same and the length of the pile to be embedded in the pile cap etc. all complete, including removal of excavated earth with all lifts and leads (Length of pile for payment shall be measured upto bottom of pile cap).450 mm dia piles			
	Net Total	600.000metre	@2112.83/metre	1267698.00
16.002	20.2.4			

Sl No	Specification	Quantity	Rate	Amount
	Boring, providing and installing bored cast-in-situ reinforced cement concrete piles of grade M-25 of specified diameter and length below the pile cap to carry a safe working load not less than specified, excluding the cost of steel reinforcement but including the cost of boring, with bentonite solution and temporary casing of appropriate length for setting out and removal of same and the length of the pile to be embedded in the pile cap etc. all complete, including removal of excavated earth with all lifts and leads (Length of pile for payment shall be measured upto bottom of pile cap).500 mm dia piles			
	Net Total	302.000metre	@2484.56/metre	750337.12
16.003	20.2A.1			
	Boring, providing and installation bored cast-in-situ reinforced cement concrete piles of garde M-25 of specified diameter and length below pile cap, to carry a safe working load not less than specified, excluding the cost of steel reinforcement but including the cost of boring with bentonite solution and temporary casing of appropriate length for setting out and removal of same and the length of the pile to be embedded in the pile cap etc. by Crawler mounted, telescopic boom hydraulic pilling Rig all complete, including removal of excavated earth with all its lifts and leads (length of pile for payment shall be measured up to bottom of pile cap). Note: Truck Mounted rotary/TMR/Tube well boring machine shall not be used.600 mm dia piles			
	Net Total	1108.000metre	@4943.12/metre	5476976.96
16.004	5.22.6			
	Steel reinforcement for R.C.C work including straightening, cutting, bending, placing in position and binding all complete upto plinth levelThermo - Mechanically Treated bars of grade Fe-500D or more			
	Net Total	59102.400kilogram	@97.69/kilogram	5773713.46
16.005	20.6.2.1			
	Vertical load testing of piles in accordance with IS 2911(Part IV) including installation of loading platform and preparation of pile head or construction of test cap and dismantling of test cap after test etc. complete as per specification & the direction of engineer -in-Charge. Single pile above 50 tonne and upto 100 tonne capacityInitial test			
	Net Total	4.000per test	@70430.46/per test	281721.84
16.006	20.6.2.2			
	Vertical load testing of piles in accordance with IS 2911(Part IV) including installation of loading platform and preparation of pile head or construction of test cap and dismantling of test cap after test etc. complete as per specification & the direction of engineer -in-Charge. Single pile above 50 tonne and upto 100 tonne capacityRoutine test			

Sl No	Specification	Quantity	Rate	Amount
	Net Total	6.000per test	@35997.79/per test	215986.74
16.007	OD21911/2022-2023			
	site clearence and levelling			
	Net Total	1.000L.S	@116150.00/L.S	116150.00
			Heading Total(Rs)	13882584.12
17	**SEWER NETWORK WITH PIPES, MANHOLES, INSPECTION CHAMBERS AND WELLS**			
17.001	2.6.1			
	Earth work in excavation by mechanical means (Hydraulic excavator)/manual means over areas (exceeding 30 cm in depth, 1.5 m in width as well as 10 sqm on plan) including disposal of excavated earth, lead up to 50 m and lift up to 1.5 m, disposed earth to be levelled and neatly dressed.All kinds of soil			
	Net Total	42468.308cum	@212.70/cum	9033009.11
17.002	4.1.6			
	Providing and laying in position cement concrete of specified grade excluding the cost of centering and shuttering - All work up to plinth level:1:3:6 (1 cement : 3 coarse sand : 6 graded stone aggregate 40 mm nominal size)			
	Net Total	4206.727cum	@7166.46/cum	30147340.78
17.003	OD21921/2022-2023			
	(Item 5.37.1+5.34.1) Providing and laying in position ready mixed M-25 grade concrete for reinforced cement concrete work, using cement content as per approved design mix, manufactured in fully automatic batching plant and transported to site of work in transit mixer for all leads, having continuous agitated mixer, manufactured as per mix design of specified grade for reinforced cement concrete work including pumping of R.M.C. from transit mixer to site of laying, excluding the cost of centering, shuttering finishing and reinforcement including cost of admixtures in recommended proportions as per IS: 9103 to accelerate/ retard setting of concrete, improve workability without impairing strength and durability as per direction of the Engineer - in -charge. Note:- Cement content considered in this item is @330 kg/cum. Excess /less cement used as per design mix is payable/recoverable separately. All wiork upto plinth level Extra for providing richer mixes at all floor levels. Note:- Excess/less cement over the specified cement content used is payable/ recoverable separately. Providing M-30 grade concrete instead of M-25 grade BMC/RMC. (Note:- Cement content considered in M-30 is @ 340 kg/cum). 			
	Net Total	18858.501cum	@9906.33/cum	186818534.21
17.004	5.22.6			
	Steel reinforcement for R.C.C work including straightening, cutting, bending, placing in position and binding all complete upto plinth levelThermo - Mechanically Treated bars of grade Fe-500D or more			

Sl No	Specification	Quantity	Rate	Amount
	Net Total	2074435.550kilogram	@97.69/kilogram	202651608.88
17.005	4.12			
	Extra for providing and mixing water proofing material in cement concrete work in doses by weight of cement as per manufacturer's specification .			
	Net Total	6411891.700kg	@1.33/kg	8527815.96
17.006	5.9.1			
	Centering and shuttering including strutting, etc. and removal of form for:Foundations, footings, bases of columns, etc for mass concrete			
	Net Total	13124.145sqm	@333.24/sqm	4373490.08
17.007	5.9.2			
	Centering and shuttering including strutting, etc. and removal of form for:Walls (any thickness) including attached pilasters, butteresses, plinth and string courses etc.			
	Net Total	82519.745sqm	@712.76/sqm	58816773.45
17.008	22.23.1			
	Providing and applying integral crystalline slurry of hydrophilic in nature for waterproofing treatment to the RCC structures like retaining walls of the basement, water tanks, roof slabs, podiums, reservior, sewage & water treatment plant, tunnels / subway and bridge deck etc., prepared by mixing in the ratio of 5 : 2 (5 parts integral crystalline slurry : 2 parts water) for vertical surfaces and 3 : 1 (3 parts integral crystalline slurry : 1 part water) for horizontal surfaces and applying the same from negative (internal) side with the help of synthetic fiber brush. The material shall meet the requirements as specified in ACI-212-3R-2010 i.e by reducing permeability of concrete by more than 90% compared with control concrete as per DIN 1048 and resistant to 16 bar hydrostatic pressure on negative side. The crystalline slurry shall be capable of self-healing of cracks up to a width of 0.50mm. The work shall be carried out all complete as per specification and the direction of the engineerin-charge. The product performance shall carry guarantee for 10 years against any leakage.For vertical surface two coats @0.70 kg per sqm			
	Net Total	32543.160sqm	@566.73/sqm	18443185.07
17.009	22.23.2			
	Providing and applying integral crystalline slurry of hydrophilic in nature for waterproofing treatment to the RCC structures like retaining walls of the basement, water tanks, roof slabs, podiums, reservior, sewage & water treatment plant, tunnels / subway and bridge deck etc., prepared by mixing in the ratio of 5 : 2 (5 parts integral crystalline slurry : 2 parts water) for vertical surfaces and 3 : 1 (3 parts integral crystalline slurry : 1 part water) for horizontal surfaces and applying the same from negative (internal) side with the help of synthetic fiber brush. The material shall meet the requirements as specified in ACI-212-3R-2010 i.e by reducing permeability of concrete by more than 90% compared with control concrete as per			

Sl No	Specification	Quantity	Rate	Amount
	DIN 1048 and resistant to 16 bar hydrostatic pressure on negative side. The crystalline slurry shall be capable of self-healing of cracks up to a width of 0.50mm. The work shall be carried out all complete as per specification and the direction of the engineerin-charge. The product performance shall carry guarantee for 10 years against any leakage.For horizontal surface one coat @1.10 kg per sqm.			
	Net Total	4621.630sqm	@436.82/sqm	2018820.42
17.010	2.25			
	Filling available excavated earth (excluding rock) in trenches, plinth, sides of foundation etc. in layers not exceeding 20 cm in depth, consolidating each deposited layer by ramming and watering, lead up to 50 m and lift up to 1.5 m.			
	Net Total	19598.986cum	@256.95/cum	5035959.45
17.011	100.98.138			
	Supply of HDPE Pipe PE 100 (IS 4984/1995), 8kg, 160mm Outer Dia.			
	Net Total	31212.000metre	@689.21/metre	21511622.52
17.012	100.98.141			
	Supply of HDPE Pipe PE 100 (IS 4984/1995), 8kg, 225mm Outer Dia.			
	Net Total	58006.000metre	@1349.57/metre	78283157.42
17.013	100.98.143			
	Supply of HDPE Pipe PE 100 (IS 4984/1995), 8kg, 280mm Outer Dia.			
	Net Total	2510.000metre	@2087.37/metre	5239298.70
17.014	100.98.145			
	Supply of HDPE Pipe PE 100 (IS 4984/1995), 8kg, 355mm Outer Dia.			
	Net Total	2265.000metre	@3475.43/metre	7871848.95
17.015	100.98.161			
	Supply of HDPE Pipe PE 100 (IS 4984/1995), 10kg, 225mm Outer Dia.			
	Net Total	2897.000metre	@1659.27/metre	4806905.19
17.016	100.98.163			
	Supply of HDPE Pipe PE 100 (IS 4984/1995), 10kg, 280mm Outer Dia.			
	Net Total	868.000metre	@2561.00/metre	2222948.00
17.017	100.98.165			
	Supply of HDPE Pipe PE 100 (IS 4984/1995), 10kg, 355mm Outer Dia.			
	Net Total	443.000metre	@4265.07/metre	1889426.01
17.018	100.98.166			

Sl No	Specification	Quantity	Rate	Amount
	Supply of HDPE Pipe PE 100 (IS 4984/1995), 10kg, 400mm Outer Dia.			
	Net Total	513.000metre	@5434.59/metre	2787944.67
17.019	100.98.167			
	Supply of HDPE Pipe PE 100 (IS 4984/1995), 10kg, 450mm Outer Dia.			
	Net Total	924.000metre	@8265.51/metre	7637331.24
17.020	100.98.119			
	Supply of DI K9 Pipe Conforming to IS 8329/2000, 300mm Dia.			
	Net Total	180.000metre	@4304.09/metre	774736.20
17.021	100.98.120			
	Supply of DI K9 Pipe Conforming to IS 8329/2000, 350mm Dia.			
	Net Total	150.000metre	@5243.16/metre	786474.00
17.022	OD21922/2022-2023			
	supplying of DWC HDPE pipes of 600mm dia			
	Net Total	3708.000metre	@5000.00/metre	18540000.00
17.023	100.1.1			
	Excavating trenches of required width for pipes, cables, etc., including excavation for sockets, and dressing of sides, ramming of bottoms, depth up to 1.5m, including getting out the excavated soil, and then returning the soil as required, in layers not exceeding 20cm in depth, including consolidating each deposited layer by ramming, watering, etc., and disposing of surplus excavated soil as directed, within a lead of 50m, in all kinds of soil.			
	Net Total	114369.000cum	@552.10/cum	63143124.90
17.024	100.1.2			
	Excavating trenches of required width for pipes, cables, etc., including excavation for sockets, and dressing of sides, ramming of bottoms, depth exceeding 1.5m but not exceeding 3m, including getting out the excavated soil, and then returning the soil as required, in layers not exceeding 20cm in depth, including consolidating each deposited layer by ramming, watering, etc., and disposing of surplus excavated soil as directed, within a lead of 50m, in all kinds of soil.			
	Net Total	48149.000cum	@657.82/cum	31673375.18
17.025	100.1.3			
	Excavating trenches of required width for pipes, cables, etc., including excavation for sockets, and dressing of sides, ramming of bottoms, depth exceeding 3m but not exceeding 4.5 m, including getting out the excavated soil, and then returning the soil as required, in layers not exceeding 20 cm in depth, including consolidating each deposited layer by ramming, watering, etc., and disposing of surplus excavated soil as directed, within a lead of 50m, in all kinds of soil.			
	Net Total	24339.000cum	@763.55/cum	18584043.45

Sl No	Specification	Quantity	Rate	Amount
17.026	100.10.5			
	Laying HDPE pipes (IS : 4984) on land portion including conveying within initial lead and aligning the pipes, electro-fusion welding using automatic or semi-automatic electrofusion machines, testing the pipeline thus fabricated to suit the hydraulic working pressure and after testing, aligning the pipeline, lowering the pipe in position into the trenches already made, testing the line to suitable pressure with potable water before back filling and levelling the trenches including all labour charge, hire for appliances etc., complete but excluding cost of pipe and fittings: 160mm Nominal Outside Diameter Pipes.			
	Net Total	31212.000metre	@213.86/metre	6674998.32
17.027	100.10.8			
	Laying HDPE pipes (IS : 4984) on land portion including conveying within initial lead and aligning the pipes, electro-fusion welding using automatic or semi-automatic electrofusion machines, testing the pipeline thus fabricated to suit the hydraulic working pressure and after testing, aligning the pipeline, lowering the pipe in position into the trenches already made, testing the line to suitable pressure with potable water before back filling and levelling the trenches including all labour charge, hire for appliances etc., complete but excluding cost of pipe and fittings: 225mm Nominal Outside Diameter Pipes.			
	Net Total	60903.000metre	@374.98/metre	22837406.94
17.028	100.10.10			
	Laying HDPE pipes (IS : 4984) on land portion including conveying within initial lead and aligning the pipes, electro-fusion welding using automatic or semi-automatic electrofusion machines, testing the pipeline thus fabricated to suit the hydraulic working pressure and after testing, aligning the pipeline, lowering the pipe in position into the trenches already made, testing the line to suitable pressure with potable water before back filling and levelling the trenches including all labour charge, hire for appliances etc., complete but excluding cost of pipe and fittings: 280mm Nominal Outside Diameter Pipes.			
	Net Total	3378.000metre	@516.54/metre	1744872.12
17.029	100.10.12			
	Laying HDPE pipes (IS : 4984) on land portion including conveying within initial lead and aligning the pipes, electro-fusion welding using automatic or semi-automatic electrofusion machines, testing the pipeline thus fabricated to suit the hydraulic working pressure and after testing, aligning the pipeline, lowering the pipe in position into the trenches already made, testing the line to suitable pressure with potable water before back filling and levelling the trenches including all labour charge, hire for appliances etc., complete but excluding cost of pipe and fittings: 355mm Nominal Outside Diameter Pipes.			
	Net Total	2265.000metre	@651.50/metre	1475647.50
17.030	100.10.13			
	Laying HDPE pipes (IS : 4984) on land portion including conveying within initial lead and aligning the pipes, electro-fusion welding using automatic or semi-automatic			

Sl No	Specification	Quantity	Rate	Amount
	electrofusion machines, testing the pipeline thus fabricated to suit the hydraulic working pressure and after testing, aligning the pipeline, lowering the pipe in position into the trenches already made, testing the line to suitable pressure with potable water before back filling and levelling the trenches including all labour charge, hire for appliances etc., complete but excluding cost of pipe and fittings: 400mm Nominal Outside Diameter Pipes.			
	Net Total	513.000metre	@725.75/metre	372309.75
17.031	100.10.14			
	Laying HDPE pipes (IS : 4984) on land portion including conveying within initial lead and aligning the pipes, electro-fusion welding using automatic or semi-automatic electrofusion machines, testing the pipeline thus fabricated to suit the hydraulic working pressure and after testing, aligning the pipeline, lowering the pipe in position into the trenches already made, testing the line to suitable pressure with potable water before back filling and levelling the trenches including all labour charge, hire for appliances etc., complete but excluding cost of pipe and fittings: 450mm Nominal Outside Diameter Pipes.			
	Net Total	924.000metre	@806.90/metre	745575.60
17.032	OD21923/2022-2023			
	Laying of DWC (Double walll corrugated)PE pipes of 600mm diameter			
	Net Total	3708.000metre	@1078.29/metre	3998299.32
17.033	OD21924/2022-2023			
	Laying 300 DI pumping mains for crossing railway lines by HDD method			
	Net Total	1.000L.S	@2500000.00/L.S	2500000.00
17.034	OD21925/2022-2023			
	Laying 350 DI pumping mains for crossing railway lines by HDD method			
	Net Total	1.000L.S	@3000000.00/L.S	3000000.00
17.035	15.43.2			
	Dismantling manually / by mechanical means including stacking of serviceable material and disposal of unserviceable material within 50 metres lead as per direction of Engineer -in-Charge:Bituminous road			
	Net Total	73000.000sqm	@358.69/sqm	26184370.00
17.036	OD21926/2022-2023			
	Supply and fixing 300 mm butterfly valves			
	Net Total	6.000L.S	@30300.00/L.S	181800.00
17.037	OD21927/2022-2023			
	Road restoration charges for excavated protions of Bitumen Macadam and Bitumen Concrete (BMBC), interlocked tiled surface and municipal roads			
	Net Total	8417.100sqm	@3633.49/sqm	30583448.68

Sl No	Specification	Quantity	Rate	Amount
17.038	OD21928/2022-2023			
	100 mm thick interlocking tiled road			
	Net Total	21956.360sqm	@3556.61/sqm	78090209.54
17.039	OD21929/2022-2023			
	20 mm close graded chipping carpet roads			
	Net Total	43912.440sqm	@2651.70/sqm	116442617.15
17.040	OD21930/2022-2023			
	Providing steel sheet shoring to the sides of the trenches to depths of above 4.00 m but not exceeding 6.00m using 6 mm M.S. sheet 0.50 M wide stiffen on edges with 50 mm x 50mm x 6 mm M.S. angles driving down vertically on either side one after another in lines and levels with suitable pile driving equipments and accessories to a maximum depth of 0.50 M below the bottom of the proposed excavation 0.5 M above ground level suitably braced by horizontal walling pieces at 75 x 150 mm x 8 mm angles on either side at intervals not exceeding 1.50M and horizontal screw jack type struts at 1.50M intervals and maintaining the shoring till the pipes are laid and works are completed, dismantling, cleaning and restacking for reuse including all labour, hire charges and conveyance for equipments, tools and plants and sundries etc. complete.			
	Net Total	54000.000sqm	@875.77/sqm	47291580.00
17.041	OD21931/2022-2023			
	Taking connection for manholes and chambers			
	Net Total	10404.0001nos	@756.00/1 nos	7865424.00
17.042	OD21932/2022-2023			
	Connection fee for individual houses			
	Net Total	7000.0001nos	@20000.00/1 nos	140000000.00
17.043	OD21933/2022-2023			
	Fencing one side of trenches, 1.50 m height with two rows of 10 cm plastic caution tape in vertical casuarina pole (girth 15cm to 24cm) fixed at 2 m intervals.			
	Net Total	72000.000metre	@32.00/metre	2304000.00
17.044	19.18.3			
	Supplying and fixing C.I with out frame for manholes:560 mm diameter (heavy duty) the weight of the cover to be not less than 108 kg			
	Net Total	2601.000each	@7980.87/each	20758242.87
			Heading Total(Rs)	1304669575.63
18	**ECO-FRIENDLY UNITS**			

Sl No	Specification	Quantity	Rate	Amount
18.001	OD21934/2022-2023			
	Green Belt, Special Exterior Wall Garden and Landscaping			
	Net Total	1.0001 nos	@1155000.25/1 nos	1155000.25
18.002	OD21935/2022-2023			
	Facility for Recycling Purposes			
	Net Total	1.0001 nos	@500000.20/1 nos	500000.20
18.003	OD21936/2022-2023			
	Building with Trussed Roof and Eco-friendly walls			
	Net Total	2.0001 nos	@924001.13/1 nos	1848002.26
18.004	OD21937/2022-2023			
	Building with Trussed Roof and Eco-friendly walls			
	Net Total	1.0001 nos	@8030000.05/1 nos	8030000.05
18.005	OD21938/2022-2023			
	Equipment, Laboratory items, Furniture and Computer system for CIPS of IoT			
	Net Total	1.0001 nos	@1500000.59/1 nos	1500000.59
18.006	OD21939/2022-2023			
	Supply and installation of steel cover slab prefabricated for equalization tank			
	Net Total	1.0001 nos	@450001.11/1 nos	450001.11
			Heading Total(Rs)	13483004.46
19	**MECHANICAL ITEMS**			
19.001	OD21940/2022-2023			
	Sewage transfer pump - Supply, Installation, Commissioning, testing and trial run of submersible sewage handling type pump, with specified discharge and head and of reputed make.			
	Net Total	50.000HP (Horse power)	@15719.74/HP (Horse power)	785987.00
19.002	OD21941/2022-2023			
	Bar Screen-coarse- Supply and installation, of manual bar screen, MS – epoxy frame to be fitted in bar screen chamber of specified width, with MS flat bars and 20 mm c/c gap between bars. The frame to be mounted on the chamber and provided with MS rake arm with racks for removal of collected solids and trough to be provided for transfer of the collected solids.Flow Rate and height should be as specified. Angle of Inclination: 45 Degree,Spacing: 20mm			

Sl No	Specification	Quantity	Rate	Amount
	Net Total	69.0001 nos	@29037.50/1 nos	2003587.50
19.003	OD21942/2022-2023			
	Bar Screen-fine- Supply and installation, of manual bar screen, MS – epoxy frame to be fitted in bar screen chamber of specified width, with MS flat bars and 20 mm c/c gap between bars. The frame to be mounted on the chamber and provided with MS rake arm with racks for removal of collected solids and trough to be provided for transfer of the collected solids.Flow Rate and height should be as specified. Angle of Inclination: 45 Degree,Spacing: 6mm			
	Net Total	2.0001 nos	@29037.50/1 nos	58075.00
19.004	OD21943/2022-2023			
	MBBR media- Supplying and fixing of non-clogging freely moving biomass media of polypropylene construction Sp.Gravity 0.93 for MBBR reactor with required specific surface area, length 10-20 mm, dia 20-25 mm complete as per technical specification or as directed by Engineer in Charge			
	Net Total	1182.000cum	@17422.50/cum	20593395.00
19.005	OD21944/2022-2023			
	Air Blower Supply,erection, testing and commissioning of twin lobe air blower for indoor application complete with acoustic canopy, air filter, motor of 1500 rpm , pulleys, pressure gauges, pressure relief valve, acoustic hood, suction silencer with suitable flanges, common motor and compressor base frame with motor belt tightening arrangement interconnecting line with flanges including all accessories complete as per technical specification or as Directed by Engineer in Charge.			
	Net Total	600.000HP (Horse power)	@17422.50/HP (Horse power)	10453500.00
19.006	OD21945/2022-2023			
	Bubble Diffuser for MBBR- Fine Bubble Diffuser Supplying and fixing of retrievable type fine bubble diffusers of required dia and length, Ethylene Propylene Diene Monomer (EPDM) make with SStee1"x1",SS lifting hook 8 mm, SS foundation bolt 6 mm, SS C clamp suitable for 1"O.D, hose, PP Rope, PP swivel nut, PP sleeve, Silicone Washer, SS hos clamp, RCC block complete as per technical specification compatible for specified air flow			
	Net Total	3.0001 nos	@232300.00/1 nos	696900.00
19.007	OD21946/2022-2023			
	Air Grid Pipe Supply and installation of air pipes (HDPE) assembly into valves and other accessories as required for the blowers to various tanks as a complete unit			
	Net Total	3.0001 nos	@11615.00/1 nos	34845.00
19.008	OD21947/2022-2023			
	Plate settler media- Media to be of UV stabilized stianless steel, 750 mm height and about 1.0 mm thick. The plan settling area should be between 10 – 12 m2/m3 /day minimum at 60 degree slope. The media is to be provided along with lock nuts as required.			

Sl No	Specification	Quantity	Rate	Amount
	Net Total	1058.400sqm	@1570.00/sqm	1661688.00
19.009	OD21948/2022-2023			
	Electromagnetic Flow meter,pressure and quality sensors- Supply and erection of electromagnetic flow meter, pressure and quality sensors compatible to IoT and central control system with flow recorder, digital flow/quality/pressure indicator, flow/quality/pressure integrator with sensors, totaliser, transmittal and display arrangements and all accessories including housing arrangements, etc. complete to fix in the incoming pipeline to STP or at the Screen channel as directed by the Engineer in Charge			
	Net Total	70.0001 nos	@50000.25/1 nos	3500017.50
19.010	OD21949/2022-2023			
	Filter feed pump - Supply, Installation, Commissioning, testing and trial run of submersible filtered water handling type pump, with specified discharge and head and of reputed make.			
	Net Total	106.500HP (Horse power)	@15278.37/HP (Horse power)	1627146.41
19.011	OD21950/2022-2023			
	Pressure Sand Filter- Supply, installation and erection, testing and commissioning of of Pressure Sand Filter - MS vessel construction. Filter to be of MS construction with multiport valve for operations. Suitable stand / support should be provided along with the filter. Filtration rate should not be greater than 12 m3/hour/m2 of the filtration area. Dirt loading capacity to be sufficient to initiate backwash once in 8 hours i.e. once / shift. Filter to have inlet and outlet piping, inlet and outlet for backwash and air vent. Sand filter to be fitted with pressure guage at inlet and outlet. Sand filter main header is to be fitted with flow meter – turbine type / rotameter type with range up to minimum of 125% of the rated flow through the pipe line. Media to consist of graded pebble, coarse and fine sand. Depth of media to be as per recommendations provided in CPHEEO manual and all relevant IS Codes of prectice. Cost includes supporting foundation.			
	Net Total	4.0001 nos	@696900.00/1 nos	2787600.00
19.012	OD21951/2022-2023			
	Carbon Filter- Supply, Installation and erection, testing and comitioning of Activated Carbon Filter - MS composite vessel construction. Filter to be of MS construction with multiport valve for operations. Suitable stand / support should be provided along with the filter. Filtration rate should not be greater than 10 m3/hour/m2 of the filtration area. Filter to have inlet and outlet piping, inlet and outlet for backwash and air vent. Carbon filter to be fitted with pressure guage at outlet. Media to consist of graded pebble, coarse, fine sand and activated carbon. Depth of media to be as per recommendations provided in CPHEEO manual. Activated carbon should be of high quality for removal of impurities and to be used for waste water purification. Cost includes for foundation also.			
	Net Total	4.0001 nos	@720130.00/1 nos	2880520.00
19.013	OD21952/2022-2023			

Sl No	Specification	Quantity	Rate	Amount
	Alum and Lime Dosing System- Supply, installation, commitioning and testing of Alum dosing tank having capacity 50 litre in LLDPE/ FRP/PP material and alum dosing electronic metering type pump of 1-3 LPH range with 2.5 bar working pressure			
	Net Total	4.0001 nos	@58075.00/1 nos	232300.00
19.014	OD21953/2022-2023			
	Hypo Dosing System - Supply, installation, commitioning and testing of Hypo dosing tank having capacity 50lit in LLDPE/ FRP/PP material and hypo dosing electronic metering type pump of 1-3lph range with 2 bar working pressure			
	Net Total	2.0001 nos	@46460.00/1 nos	92920.00
19.015	OD21954/2022-2023			
	Odour control unit for co-treatment unit and STP			
	Net Total	2.0001 nos	@52267.50/1 nos	104535.00
19.016	OD21955/2022-2023			
	Sludge transfer to thickener pump - Supply, Installation, Commissioning, testing and trial run of submersible sewage handling type pump, with specified discharge and head and of reputed make.			
	Net Total	5.000HP (Horse power)	@24714.40/HP (Horse power)	123572.00
19.017	OD21956/2022-2023			
	Sludge transfer to centrifuge pump of screw type - Supply, Installation, Commissioning, testing and trial run of submersible sewage handling type pump, with specified discharge and head and of reputed make.			
	Net Total	2.000HP (Horse power)	@32109.67/HP (Horse power)	64219.34
19.018	OD21957/2022-2023			
	Filter backwash pumps - Supply, Installation, Commissioning, testing and trial run of filter backwash pump, with specified discharge and head and of reputed makewith all accessories.			
	Net Total	4.000HP (Horse power)	@32109.90/HP (Horse power)	128439.60
19.019	OD21958/2022-2023			
	Filtrate cum dilution pump to equalisation tank			
	Net Total	50.000HP (Horse power)	@32109.67/HP (Horse power)	1605483.50
19.020	OD21959/2022-2023			
	Recycled water transfer pump for dilution tank			
	Net Total	4.000HP (Horse	@32109.67/HP (Horse power)	128438.68

Sl No	Specification	Quantity	Rate	Amount
		power)		
19.021	OD21960/2022-2023			
	Sewage transfer pump - Supply, Installation, Commissioning, testing and trial run of submersible sewage handling type pump, with specified discharge and head and of reputed make.			
	Net Total	547.000HP (Horse power)	@18805.85/HP (Horse power)	10286799.95
19.022	OD21961/2022-2023			
	Supply and installation of centrifuge including foundation			
	Net Total	2.0001 nos	@464600.00/1 nos	929200.00
19.023	OD21962/2022-2023			
	Supply and installation of mixing equipment for de-nitrification tank			
	Net Total	2.0001 nos	@40652.50/1 nos	81305.00
19.024	OD21963/2022-2023			
	Supply of GPS fitted vacuum truck of capacity 3000 litres for septage management including de-sludging equipment and cleaning devices			
	Net Total	2.0001 nos	@2000000.67/1 nos	4000001.34
19.025	OD21964/2022-2023			
	Piping, bypass arrangements, steel ladder, framework and fire fighting arrangements			
	Net Total	1.0001 nos	@522675.00/1 nos	522675.00
			Heading Total(Rs)	65383150.82
20	**ELECTRICAL AND INSTRUMENTATION WORKS**			
20.001	OD21903/2022-2023			
	Interconnecting piping system: • All process piping is to be in uPVC of approved ISI make, Class 2 minimum • All process valves to be in PP/PVC of Ball / Globe type• For valves in piping of ID > 150 mm, Butterfly valves are preferred • NRV should be provided at the common discharge header of all process pumps • Dosing lines to be in flexible Teflon / rigid PVC / HDPE. Detailed hydraulic analysis must be done for the system before supply and installation.			
	Net Total	1.0001 nos	@1200000.24/1 nos	1200000.24
20.002	OD21904/2022-2023			
	ELECTRICAL & INSTRUMENTATION-Instrumentation items consisting of pressure guages, level switches, electro magnetic flow meter, normal flow meter , pressure gauges, IoT based sensors, electrical panels – Powder coated MCC Panel shall be Non compartmentalized free standing floor mounted, dust and vermin proof, with reinforcement of suitable size angle iron, channel, T -iron flats as			

Sl No	Specification	Quantity	Rate	Amount
	required. Panel shall be suitable for 415V, 3-Phase,50 Hz incomer. Switchgear components to include, but not limited to, MCCB for incomer and for each switchgear, suitable OLR and contactor provisions to be given as per guidelines of the Electrical authority. Panel to be fabricated based on the Motor Load List as given in the technical specifications AC: MS powder coated panel with switchgear components as per motor load list, fixed, floor mounted and non compartmentalized pane.INTERCONNECTING CABLING – Outgoing feeders from AC panel to each prime mover will be based on CEIG guidelines. Cables to be suitably protected either through (a) PVC conduit or (b) armored cables as appropriate Cabling includes glanding and termination for each prime mover. Cables should not be run on the ground or directly on the walls. Cables to be mounted on suitable runners / cable trays / PVC conduits as appropriate. All interconnecting cabling and glanding , termination accessories as per specifications.			
	Net Total	1.0001 nos	@4000000.41/1 nos	4000000.41
20.003	OD21905/2022-2023			
	Supply, installation and commissioning of diesel generator			
	Net Total	7.0001 nos	@139380.00/1 nos	975660.00
20.004	OD21906/2022-2023			
	Supply and installation of accessories for electrical connection and control units for lifting stations and collection wells including foundations			
	Net Total	66.0001 nos	@29037.50/1 nos	1916475.00
20.005	OD21907/2022-2023			
	Supply and installation of accessories for electrical connection and control units for lifting stations and collection wells including foundations			
	Net Total	3.0001 nos	@87112.50/1 nos	261337.50
20.006	OD21908/2022-2023			
	Supply, installation and commissioning of solar units for lifting stations and collection wells			
	Net Total	69.0001 nos	@23230.00/1 nos	1602870.00
20.007	OD21909/2022-2023			
	Supply, installation and commissioning of solar units for STP			
	Net Total	1.0001 nos	@2000000.79/1 nos	2000000.79
	Heading Total(Rs)			11956343.94
	Total Estimation PAC			1454249491.21
22	**Extra Charges**			
21.001	Provision for GST			
	1454249491.21		18.00%	261764908.

Sl No	Specification	Quantity	Rate	Amount
				42
			Grand Total	1716014399.63
			Round off	600.37
			Rounded Total(Rs)	1716015000.00
	Rupees One Hundred Seventy One Crore Sixty Lakh Fifteen Thousand			

DRAFT
PRICE
e-PLATFORM FOR THE MANAGEMENT OF PUBLIC WORKS